DRAWING NUMBER / NUMERO DISEGNO	FSC 310353	REVISION / REVISIONE	A	SHEET / FOGLIO	1/1	APPROVAL LEVEL / LIV. DI APPROVAZIONE	-
DRAWING / DISEGNO	C						

D

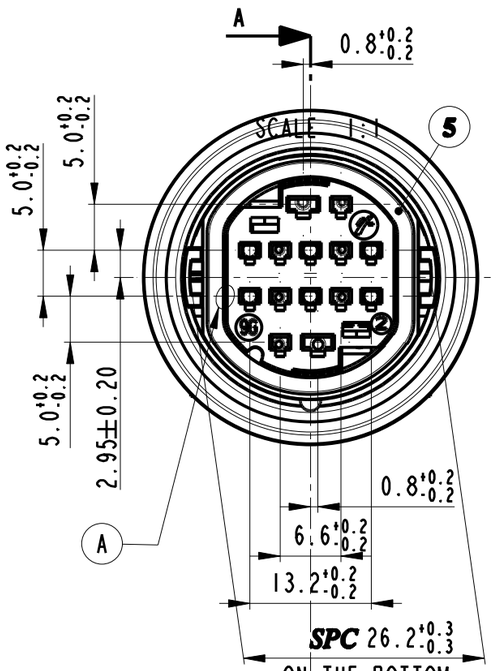

SCALE 3:2

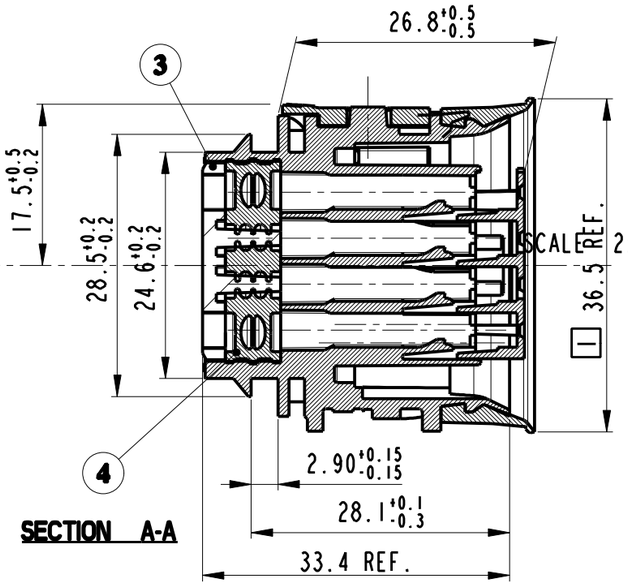

SECTION A-A

Vista Posteriore del P/N 35430381
Rear View of P/N 35430381

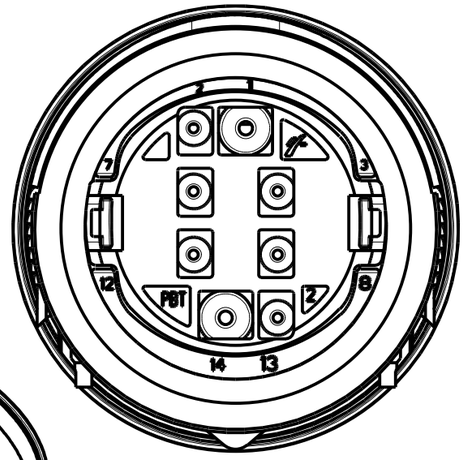

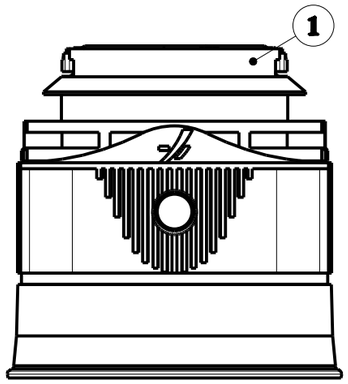

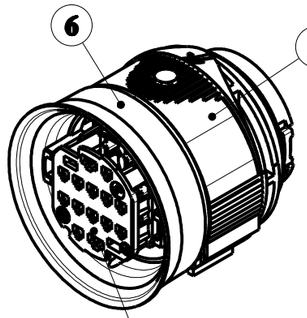

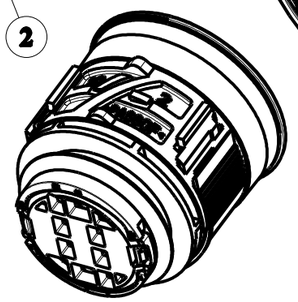

(A) PUNTO D'INIEZIONE: Ammesso mancante di stampaggio
Is admitted breakage of injection point

- This connector is designed for the following female contacts:
  MVL 211 CC 2S 1160 - APN 10740374 - MVL 1 706 00 01 - APN 13813821
  MVL 211 CC 2S 2160 - APN 10756749 - MVL 1 706 00 00 - APN 13569604

1 External gasket maximum clearance after mating male and female holder.

SPC Statistical Process Control

ITEM	COMPONENT DESCRIPTION	COLOUR	MATERIAL	ASSY P/N
7	Slide	Gray	PBT-CF	35440027 CAVITA' APERTE: CAVITY OPEN: 1 - 2 - 4 - 5 - 6 9 - 10 - 11 - 13 - 14
6	External Gasket	Black	Silicon Rubber	
5	Internal Gasket	Red	Silicon Rubber	
4	Crommet	Yellow	Silicon Rubber	
3	Premi Crommet	Natural	PBT	
2	Secondary Lock	Yellow	PBT-CF	
1	14 Way Female Holder	Black	PBT-CF	
7	Slide	Gray	PBT-CF	35430381 CAVITA' APERTE: CAVITY OPEN: 1 - 2 - 4 - 6 9 - 11 - 13 - 14
6	External Gasket	Black	Silicon Rubber	
5	Internal Gasket	Red	Silicon Rubber	
4	Crommet	Yellow	Silicon Rubber	
3	Premi Crommet	Violet	PBT	
2	Secondary Lock	Yellow	PBT-CF	
1	14 Way Female Holder	Black	PBT-CF	
7	Slide	Gray	PBT-CF	35432402 Cavita' tutte aperte All cavity open
6	External Gasket	Black	Silicon Rubber	
5	Internal Gasket	Red	Silicon Rubber	
4	Crommet	Yellow	Silicon Rubber	
3	Premi Crommet	Blue	PBT	
2	Secondary Lock	Yellow	PBT-CF	
1	14 Way Female Holder	Black	PBT-CF	
7	Slide	Gray	PBT-CF	35432515 CAVITA' APERTE: CAVITY OPEN: 4 - 6 - 9 - 11
6	External Gasket	Black	Silicon Rubber	
5	Internal Gasket	Red	Silicon Rubber	
4	Crommet	Yellow	Silicon Rubber	
3	Premi Crommet	Gray	PBT	
2	Secondary Lock	Yellow	PBT-CF	
1	14 Way Female Holder	Black	PBT-CF	

DESIGNATED CHARACTERISTICS				QCI	KCP
-	-	LAST NO USED		CI	FF
0	1	TOTAL ON DRAWING	SAFETY/COMPLIANCE		SC
QCI	KCP				

ECN-NO. / NUMERO.-ECN	DATE DD/MM/YY / DATA	REVISION / REVISIONE	POSITION / POSIZIONE	CHANGE DESCRIPTION / DESCRIZIONE MODIFICA	DRAWN BY / DISEGNATORE	CHK. BY / CONTROLLATO	APPR. BY / APPROVATO
-	-	-		-			

PRODUCT SPEC. / SPEC. DI PRODOTTO	PACKAGING SPEC. / SPEC. DI IMBALLAGGIO	APPLICATION SPEC. / SPEC. DI APPLICAZIONE
-	-	-

COPYRIGHT DELPHI CORPORATION AND/OR ITS AFFILIATES. ALL RIGHTS RESERVED. REVISED
THIS DRAWING IS THE PROPERTY OF DELPHI CORPORATION. THE REPRODUCTION, DISTRIBUTION AND UTILIZATION OF THIS DOCUMENT OR ITS RELATED CAD MATH DATA, AS WELL AS COMMUNICATION OF ANY CONTENT TO OTHERS, WITHOUT EXPRESS AUTHORIZATION IS PROHIBITED.
QUESTO DISEGNO E' PROPRIETA' DI DELPHI CORPORATION E CONTIENE INFORMAZIONI CONFIDENZIALI. LA RIPRODUZIONE, DISTRIBUZIONE E UTILIZZAZIONE DI QUESTO DOCUMENTO O DELLE SUE RELATIVE MATEMATICHE CAD, NONCHE LA COMUNICAZIONE DI QUALSIASI CONTENUTO AD ALTRI, SENZA ESPLICITA AUTORIZZAZIONE, E PROIBITA

TOLERANCES / TOLLERANZE	MATERIAL / MATERIALE	SURFACE FINISH / FINITURA SUPERFICIALE	CAD SYSTEM
± 0.3mm / ±2°	SEE TABLE	-	pro/eng.
COUNTERPART Nr. / CONTROPARTE Nr.	COLOUR / COLORE : SEE TABLE		

DO NOT SCALE DRAWING / DISEGNO FUORI SCALA	TOOL NO.	LOC. CODE / NAZIONALITA'	DIMENSION IN MILLIMETERS / DIMENSIONI IN MILLIMETRI	DWG SIZE / FORMATO
	-	IT	ISO PROJECTION / PROIEZIONE ISO	A3

	DATE / DATA	NAME / NOME
DRAWN BY / DISEGNATORE	30-01-2020	F.G
CHECKED BY / CONTROLLATO	30-01-2020	F.P.
APPROVED BY / APPROVATO	30-01-2020	G.I.

TITLE / DESCRIZIONE: **DOOR TO BODY 14 WAY ASSY FEMALE HOLDER PBT MATERIAL**

ESR NO. / NUMERO ESR: EU -
CAT. NO. / NUMERO CAT.: -

DRAWING NUMBER / NUMERO DISEGNO: **FSC 310353**

FILE NAME / NOME FILE: **FSC310353_PF_A**

SHEET / FOGLIO: 1 of / di 1

SCALE / SCALA: 1:1