SYMBOL DEFINITION		
A DIMENSION WITHOUT AN INSPECTION REPORT SYMBOL (6) DOES NOT REQUIRE INSPECTION. IT MAY BE CONTROLLED ON THE INDIVIDUAL COMPONENT DRAWING.	TOTAL NO OF INSPECTIONS REQUIRED	16
	LAST NO. USED	7

MISSING SYMBOLS
NO MISSING SYMBOL NUMBER

DWG STATUS					ZONE	REVISION HISTORY	AUTH	DR	APVD 1	APVD 2
DATE	STG	REV	N/P	CHG						
15MY19	R	01	-			CREATED CUSTOMER PART DRAWING	442922	ARU	JC	SBH

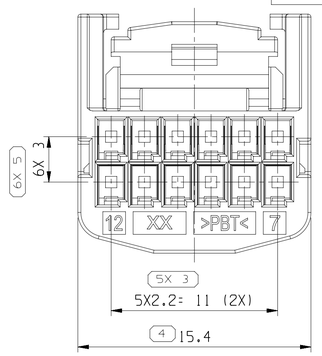

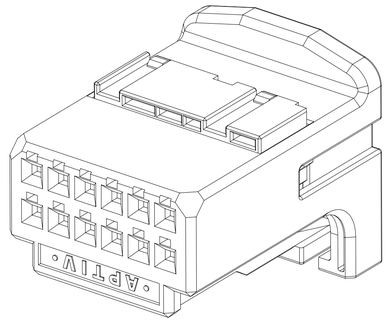

3D VIEW

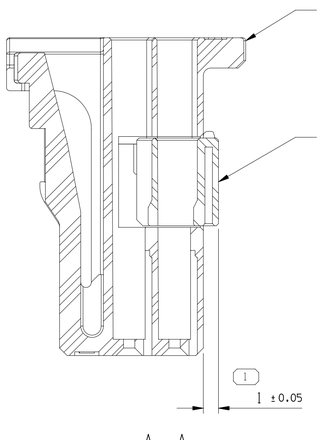

SECTION A - A

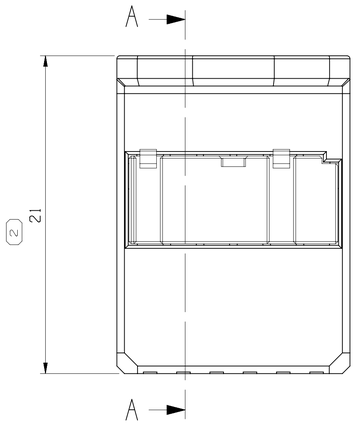

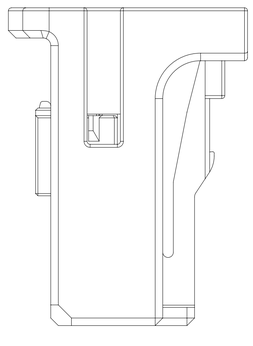

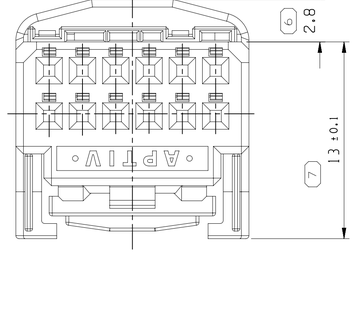

NOTES

1. UNLESS OTHERWISE SPECIFIED AND/OR INDICATED:

   DIMENSIONS ARE TO FACE OF VIEW SHOWN AND AUTOMATICALLY ROUNDED BY COMPUTER FOR INSPECTION (SEE MATH MODEL FOR PRECISE DIMENSIONS). FOR ALL OTHER DIMENSIONS NOT SHOWN BUT REQUIRED FOR TOOL BUILD, SEE MATH MODEL FOR PRECISE TOOL PATH DATA.

2. THIS PART ACCEPTS THE FOLLOWING COMPONENTS OR EQUIVALENT: SEE CHART

3. REFERENCE MATING COMPONENTS OR EQUIVALENT: TBD

NO	PART NO	REV	PART DESCRIPTION
2	35336229	01	LOCK SECONDARY TPA/CLIP
1	35336227	01	CONN 12 F
	35336230	-	ASM CONN 12 F

N/A PROCESS SENSITIVE DIMENSION

DIMENSIONS ENCLOSED IN ( ) INDICATE REFERENCE DIMENSIONS AND NO TOLERANCE LIMITS ARE ESTABLISHED

DIMENSIONAL RANGE (MM)								CHART M
FROM	> 0	> 6	> 30	> 70	>120	>160	>200	>250	>315
TO	6	30	70	120	160	200	250	315	400
TOLERANCE UNLESS OTHERWISE SPECIFIED									
	±0.1	±0.2	±0.3	±0.4	±0.45	±0.55	±0.7	±0.85	±1.05
ANGULAR TOLERANCE ±1°									

A ~~LINE~~ LINE DRAWN THROUGH A PART NUMBER INDICATES THAT PHYSICAL PARTS ARE NOT AVAILABLE FOR ORDERING.

PART NUMBERS THAT DO NOT HAVE A LINE PRESENT INDICATE THAT PHYSICAL PARTS ARE AVAILABLE FOR ORDERING.

CONTACT APTIV SALES TO ASSURE AVAILABILITY OF PARTS.

DWG TYPE: PART DRAWING

STYLE:

VOLUME (CM³):

DISTR CODE: D

UNLESS OTHERWISE SPECIFIED

THIS DOCUMENT IS IN ACCORDANCE WITH ASME Y14.5-2009, SEE APTIV ENGINEERING DESIGN STANDARD B6 2017 FOR ISO 1101:2004 RECONCILIATION REQUIREMENTS.

ALL DIMENSIONS ARE IN MILLIMETERS

REFERENCE:

THIRD ANGLE PROJECTION

DO NOT SCALE

USE MATH DATA

CAD NX

•APTIV•

CONNECTION SYSTEMS

Chennai, India

COPYRIGHT 2019 APTIV. ALL RIGHTS RESERVED.

THIS DRAWING IS THE PROPERTY OF APTIV AND CONTAINS APTIV CONFIDENTIAL INFORMATION. THE REPRODUCTION, DISTRIBUTION AND UTILIZATION OF THIS DOCUMENT OR ITS RELATED CAD MATH DATA, AS WELL AS COMMUNICATION OF ANY CONTENT TO OTHERS, WITHOUT EXPRESS AUTHORIZATION, IS PROHIBITED.

		DATE
DR		
APVD1	ARUNRAJ R	15MY19
APVD2	JIAYUN CHEN	15MY19
APVD3	HUANG SUIBIN	15MY19
APVD4		
APVD5		

SUBSTANCES OF CONCERN AND RECYCLED CONT10949001 10949001

MATERIAL: SEE PART DRAWING

DRAWING NAME: ASM CONN 12 F 0.64

DRAWING NUMBER: 35336230

SIZE	SCALE	FRAME NO	SHEET NO	STG	REV	N/P
A1	5:1	1 OF 1	1 OF 1	R	01	-

User: wukw
Path: C:\Users\wukw\Desktop\35336230-CUS01-S01-01.dwg Date: 19-Sep-19 Time: 10:32:29
Plotted: 09192019,122159,14pass.pc3