SYMBOL DEFINITION		
A DIMENSION WITHOUT AN INSPECTION REPORT SYMBOL ( ) DOES NOT REQUIRE INSPECTION. IT MAY BE CONTROLLED ON THE INDIVIDUAL COMPONENT DRAWING.	TOTAL NO OF INSPECTIONS REQUIRED	16
	LAST NO. USED	15

MISSING SYMBOLS
10 14

DWG STATUS					ZONE	REVISION HISTORY	AUTH	DR	APVD 1	APVD 2
DATE	STG	REV	N/P	CHG						
08AP22	U	01	-	-		CREATED PART DRAWING.	447768	DLC	HZ	SBH
13DE23	U	01	AA	-		ADD CODE 35842539	448873	WN	KEV	JNY

SEAL RETAINER, 4-6mm2

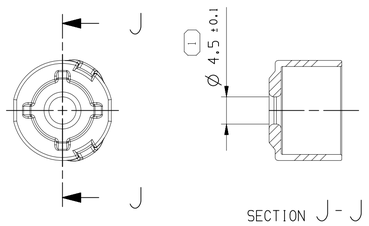

SEAL RETAINER, 8-10mm2

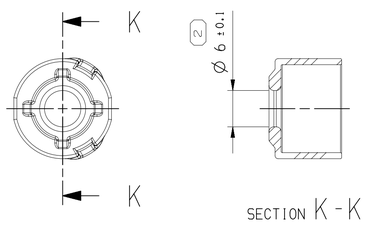

SEAL RETAINER, 13-16mm2

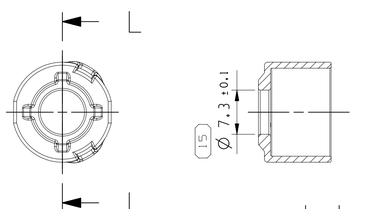

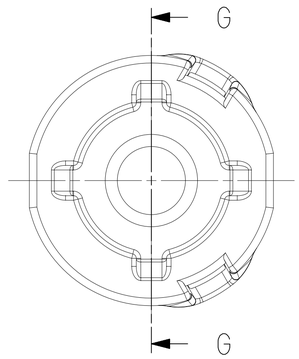

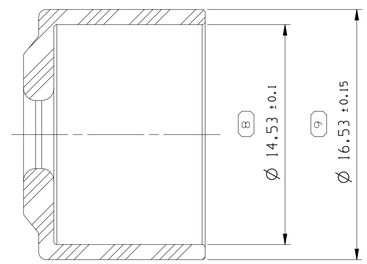

SECTION G-G

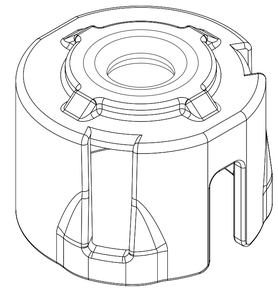

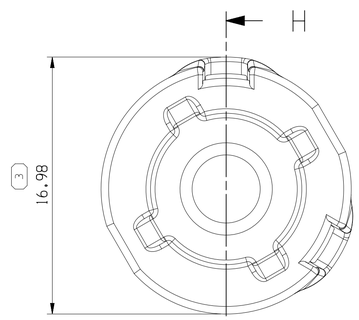

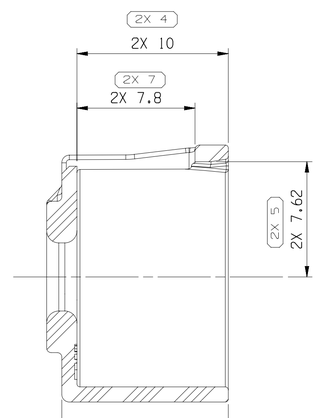

SECTION H-H

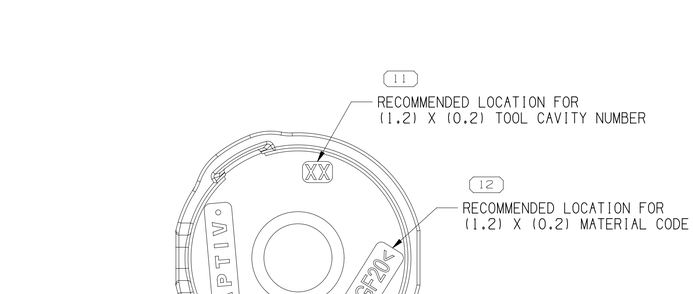

NOTE:

1. UNLESS OTHERWISE SPECIFIED AND/OR INDICATED:

   DIMENSIONS ARE TO FACE OF VIEW SHOWN AND AUTOMATICALLY ROUNDED BY COMPUTER FOR INSPECTION (SEE MATH MODEL FOR PRECISE DIMENSIONS). FOR ALL OTHER DIMENSIONS NOT SHOWN BUT REQUIRED FOR TOOL BUILD, SEE MATH MODEL FOR PRECISE TOOL PATH DATA. DRAFT IS 0.5° MAX ON ALL OUTSIDE SURFACES. MAX. BURR 0.05MM.

2. THIS PRODUCT IS NOT CATEGORIZED AS AN APPEARANCE ITEM, MINOR IMPERFECTIONS INCLUDING, BUT NOT LIMITED TO, FLOW MARKS, COLOR BLEMISHES, GATE VESTIGE, AND SOFT FLASH THAT DO NOT AFFECT THE FIT, FORM, OR FUNCTION OF THE PART ARE PERMISSIBLE PER EANP-4.3-CS-01.

3. THIS PART USED IN ASSEMBLY 35522025,35522031 & 35522033. 35608280, 35608281, 35592563 & 35592566.

SEAL LOCK RETAINER	35842539	Ø 12± 0.1	13-16	Ø 6.15-7.2	01	POLYESTER BLEND	BLACK	0.781
	35522046	Ø 12± 0.1	8-10	Ø 4.6-6.0	01	POLYESTER BLEND	BLACK	0.645
	35522045	Ø 12± 0.1	4-6	Ø 3.4-4.3	01	POLYESTER BLEND	BLACK	0.671
DESCRIPTION	PART NUMBER	CAVITY Ø	CONDUCTOR CROSS SECTION(MM2)	INSULATION Ø	PART REV.	MATERIAL	COLOR	VOLUME(CM3)

9 PROCESS SENSITIVE DIMENSION

DIMENSIONS ENCLOSED IN ( ) INDICATE REFERENCE DIMENSIONS AND NO TOLERANCE LIMITS ARE ESTABLISHED

DIMENSIONAL RANGE (MM)									CHART M
FROM	> 0	> 6	> 30	> 70	>120	>160	>200	>250	>315
TO	6	30	70	120	160	200	250	315	400
TOLERANCE UNLESS OTHERWISE SPECIFIED									
	±0.1	±0.2	±0.3	±0.4	±0.45	±0.55	±0.7	±0.85	±1.05
ANGULAR TOLERANCE ±1°									

A ~~~~ LINE DRAWN THROUGH A PART NUMBER INDICATES THAT PHYSICAL PARTS ARE NOT AVAILABLE FOR ORDERING.

PART NUMBERS THAT DO NOT HAVE A LINE PRESENT INDICATE THAT PHYSICAL PARTS ARE AVAILABLE FOR ORDERING.

CONTACT APTIV SALES TO ASSURE AVAILABILITY OF PARTS.

DWG TYPE: PART DRAWING

STYLE

VOLUME (CM³): SEE CHART

DISTR CODE: D

UNLESS OTHERWISE SPECIFIED

THIS DOCUMENT IS IN ACCORDANCE WITH ASME Y14.5-2009, SEE APTIV ENGINEERING DESIGN STANDARD B6 2017 FOR ISO 1101:2004 RECONCILIATION REQUIREMENTS.

ALL DIMENSIONS ARE IN MILLIMETERS

REFERENCE

THIRD ANGLE PROJECTION

DO NOT SCALE

USE MATH DATA

CAD NX

DELPHI

CONNECTION SYSTEMS

Anting, China

COPYRIGHT 2023 APTIV. ALL RIGHTS RESERVED.

THIS DRAWING IS THE PROPERTY OF APTIV AND CONTAINS APTIV CONFIDENTIAL INFORMATION. THE REPRODUCTION, DISTRIBUTION AND UTILIZATION OF THIS DOCUMENT OR ITS RELATED CAD MATH DATA, AS WELL AS COMMUNICATION OF ANY CONTENT TO OTHERS, WITHOUT EXPRESS AUTHORIZATION, IS PROHIBITED.

		DATE
DR		
APVD1	WANG NIAN	18DE23
APVD2	KEVIN ZHOU	18DE23
APVD3	JONNY ZHENG	18DE23
APVD4		
APVD5		

SUBSTANCES OF CONCERN AND RECYCLED CONT10949001 10949001

MATERIAL: SEE CHART

DRAWING NAME: TAXI LOCK RETAINER

DRAWING NUMBER: 35522076

SIZE	SCALE	FRAME NO	SHEET NO	STG	REV	N/P
A1	5:1	1 OF 1	1 OF 1	U	01	AA

User: 1 of 35
DCAS_35522076_CUSO1-SO1/01AA Date: 09-Aug-24 Time: 12:49:36
K_4F35_08092024_04:47:63pssa.cub