	CODING
MVL FEMALE CONNECTOR PART NUMBER	PPI0000555
REVISION PART NUMBER	N (02)
APTIV FEMALE CONNECTOR PART NUMBER	33500464
REVISION PART NUMBER	02 (02)
SCALE 1:1 / VERSION 90°	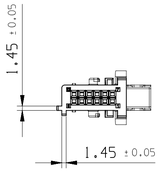

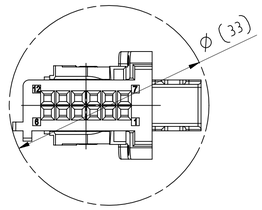

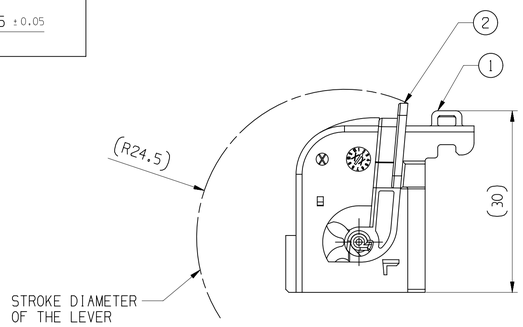

FOR INFORMATION ONLY /
FEMALE CONNECTOR WITH
CLOSED LEVER

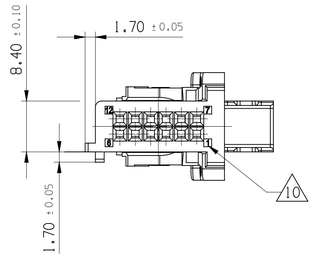

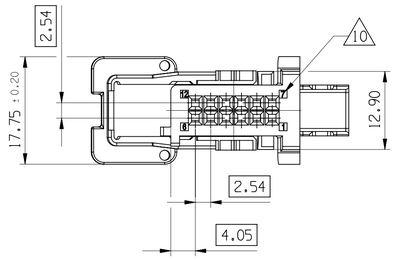

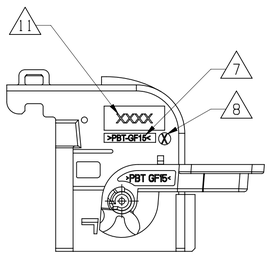

DELIVERY CONDITION:
LEVER IN OPEN POSITION

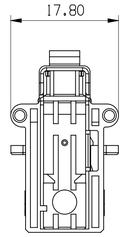

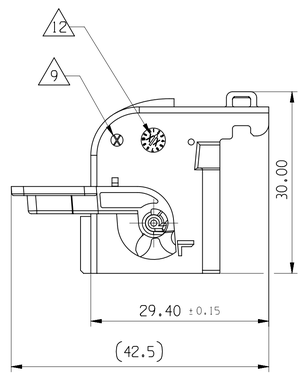

NOTE	SPECIFICATIONS
1	FEMALE CONNECTOR ACCORDING TO APTIV SPECIFICATION: CAQE TBD
2	FEMALE CONNECTOR ACCORDING TO: -TEMPERATURE CLASS T2 -ENGINE VIBRATOR CLASS V1 -SEALING CLASS E0
3	USER'S MANUAL: PU127
4	DELIVERY CONNECTOR WEIGHT : SEE TABLE
5	NO WAFER HINGE OR WAFER HINGE BROKEN ALLOWED
6	VISUAL DEFECTS ON NO FUNCTIONNAL AREAS ALLOWED
7	MATERIAL MARKING
8	MOLD CAVITY NUMBER
9	PART REVISION NUMBER
10	WAY NUMBER
11	SUPPLIER LOGO
12	DATE INSERT

ASSOCIATED PARTS (FOR INFORMATION)		
DESCRIPTION	MVL P/N	APTIV P/N
FEMALE TERMINAL CARRIER 12W	PPI0000494	33500461

VERSION 90°	12W FEMALE CONNECTOR BROWN	F796500	33513069	FEMALE HOUSING 90°	PPI0000491	33522714	3.47	PBT GF15	BROWN	1
				LEVER	PPI0000492	33522709		PBT GF15	BLACK	2
VERSION	CODING	MVL P/N	APTIV P/N	DESCRIPTION	MVL P/N	APTIV PART NUMBER	WEIGHT (g)	MATERIAL	COLOR	NO.

DWG STATUS DATE	STG	REV	N/P	CHG	ZONE	REVISION HISTORY	AUTH	DR	APVD 1	APVD 2
9MR22	R	01				INITIAL RELEASE		P.BAL	J.LAL	J.MOI
25AU22	R	02	-		H10	MVL AND APTIV PART REVISION UPDATED FOR CODING PART		T.BHA	J.MOI	J.MOI

3D VIEW

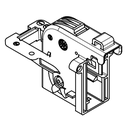

SCALE 1:1

A LINE DRAWN THROUGH A PART NUMBER INDICATES THAT PHYSICAL PARTS ARE NOT AVAILABLE FOR ORDERING.

PART NUMBERS THAT DO NOT HAVE A LINE PRESENT INDICATE THAT PHYSICAL PARTS ARE AVAILABLE FOR ORDERING.

CONTACT APTIV SALES TO ASSURE AVAILABILITY OF PARTS.

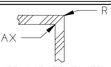

SHARP CORNER TOLERANCE

DIM TO CHECK / ( ) DIM FOR HELP / THEORETIC DIM	DIMENSIONAL RANGE (MM)									CHART E1
	FROM / TO	> 0 20	> 20 30	> 30 70	> 70 100	>100 150	>150 200	>200 250	>250 300	>300 400
	TOLERANCE UNLESS OTHERWISE SPECIFIED									
		±0.15	±0.2	±0.3	±0.4	±0.5	±0.6	±0.8	±1	±1.2
	ANGULAR TOLERANCE ±2°									

DWG TYP: CUSTOMER PART DRAWING

WEIGHT (GR): SEE TABLE

VOLUME (CM³): ---

ROUTING

DISTR CODE: D

UNLESS OTHERWISE SPECIFIED

GENERAL TOLERANCES ACCORDING TO:

SEE CHART

GD&T ACCORDING TO:

ISO 1101

REFERENCE

FIRST ANGLE PROJECTION

DO NOT SCALE

USE MATH DATA

CAD NX

•APTIV•

CONNECTION SYSTEMS

Chennai, India

COPYRIGHT 2022 APTIV. ALL RIGHTS RESERVED.

THIS DRAWING IS THE PROPERTY OF APTIV AND CONTAINS APTIV CONFIDENTIAL INFORMATION. THE REPRODUCTION, DISTRIBUTION AND UTILIZATION OF THIS DOCUMENT OR ITS RELATED CAD MATH DATA, AS WELL AS COMMUNICATION OF ANY CONTENT TO OTHERS, WITHOUT EXPRESS AUTHORIZATION, IS PROHIBITED.

		DATE
DR	P.BALAJI	09MR22
APVD1	J.LALU	09MR22
APVD2	MOINEAU JOHANN	09MR22
APVD3		
APVD4		
APVD5		

SUBSTANCES OF CONCERN AND RECYCLED CONTENT PER APTIV 1094900 1

MATERIAL: SEE TABLE

DRAWING NAME: 12W FEMALE CONNECTOR 12W DUO-TWIN/MOS COMPATIBLE

DRAWING NUMBER: 13936169

SIZE	SCALE	FRAME NO	SHEET NO	STG	REV	N/P
A1	2:1	1 OF 1	1 OF 1	R	02	-

User: rpatak
Plot: rpatak-09-CUS03-501/02 Date: 30-Sep-22 Time: 17:31:41
rpatak,09302022,14:00,154pages,cus