DELPHI

2 Way DCS Female Connector
Conector Porta Femea 2 Vias
D C S F H 2 J-__

FI. DE FIS. R A

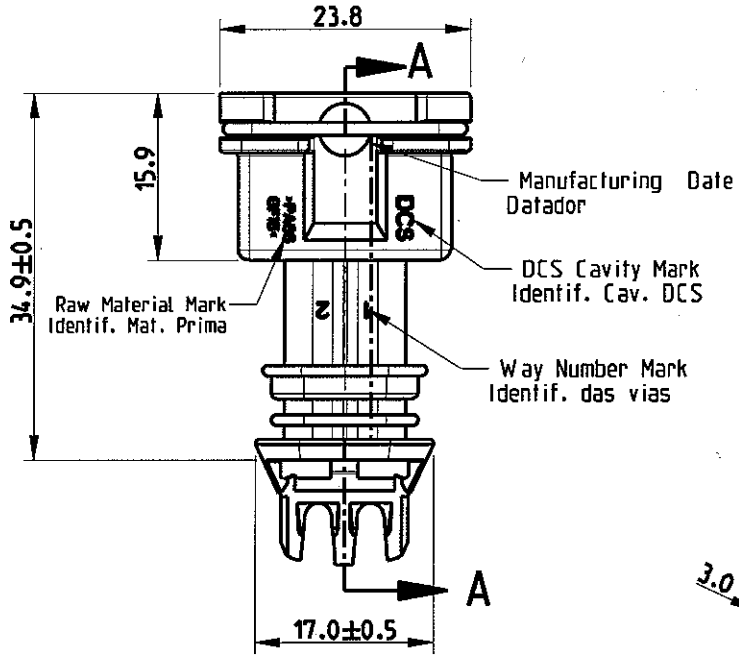

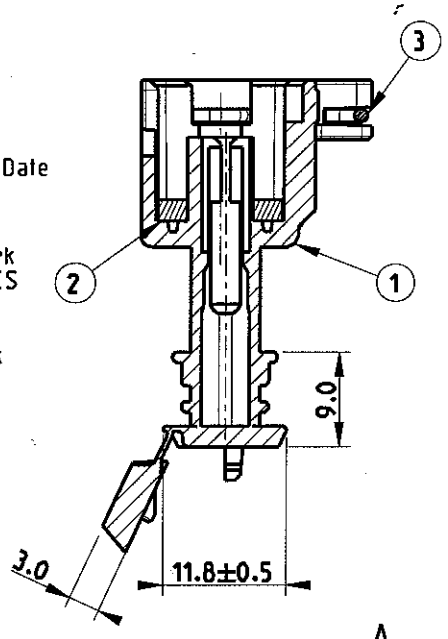

SECTION A-A

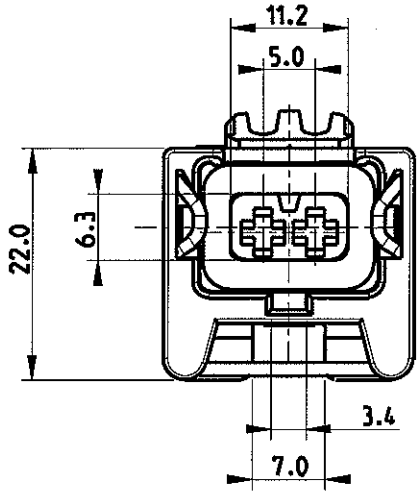

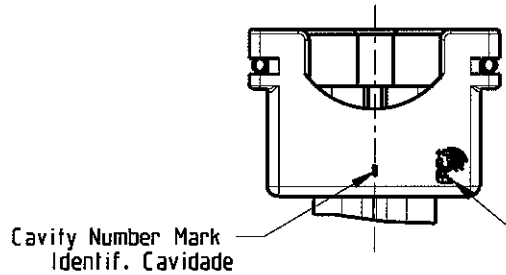

Notes/ Notas:
1- Tolerance/ Tolerancia: ±0.3
2- Measurements in mm/ Medidas em mm

DCSFH2J-BN	-	33500726	01	DCSFH2J-P1-BN Brown/ Marrom	FH2CFR-P3 Red/ Vermelho	8 022 02 60-8
DCSFH2J-BK	-	15470506	01	DCSFH2J-P1-BK Black/ Preto		
DCSFH2J-GY	-	33500728	01	DCSFH2J-P1-GY Grey/ Cinza		
DCSFH2J-RD	-	33500729	01	DCSFH2J-P1-RD Red/ Vermelho		
DCSFH2J-GN	-	33500727	01	DCSFH2J-P1-GN Green/ Verde		
DCSFH2J-BL	-	33500725	01	DCSFH2J-P1-BL Blue/ Azul		
DCSFH2J-YE	-	33500731	01	DCSFH2J-P1-YE Yellow/ Amarelo		
DCSFH2J-WH	-	33500730	01	DCSFH2J-P1-WH White/ Branco		
Part Number	Part rev	Part Number	Part rev	Pos.1 Housing/ Alojamento PA 6.6 - GF15	Pos.2 Seal/ Selo Silicon	Pos.3 Spring/ Mola AISI 302 Ø1.25
MVL		DELPHI				

					R
01.02.13	SIVA	L.Franco	Julio	Delphi P/N added ECO 421019	R A
12.03.07	L. Oliveira	Marcelo	Julio	Alterado: duas articulações para uma central	R 1
Data	Des.	Ver.	Aprov.	SUBSTITUICAO DE	SAD-76075
02.02.05	Gabriel	Marcelo	Julio		

OBS: SO ALT. NO CAD.

011