ISOMETRIC VIEW
SCALE

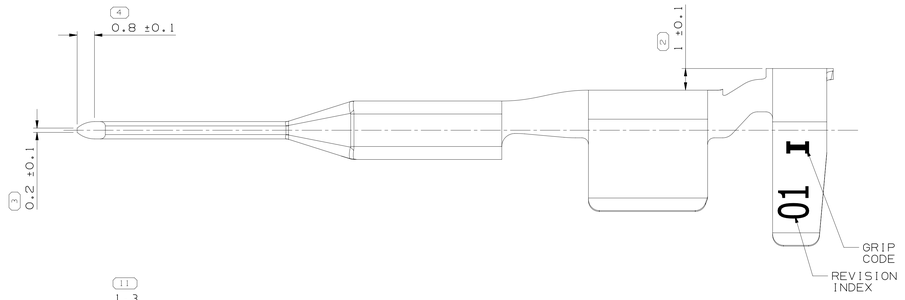

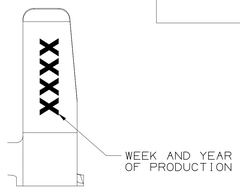

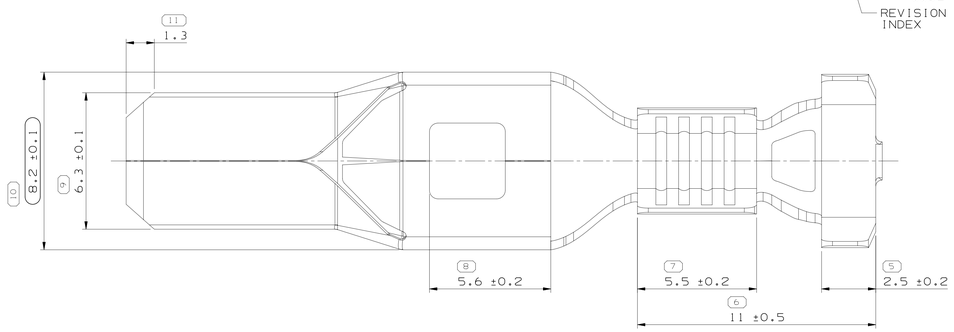

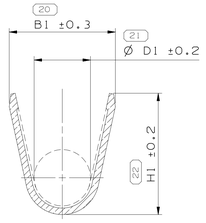

SECTION B-B
CORE GRIP
SINGLE WIRE

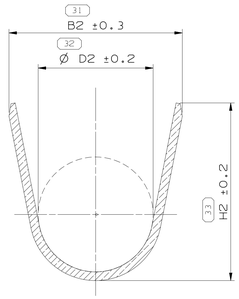

SECTION C-C
INSULATION GRIP
SINGLE WIRE

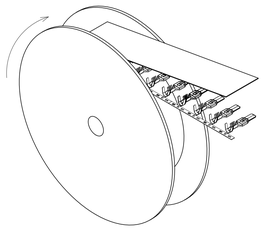

WINDING UP DIRECTION
AFTER STAMPING

PACKAGE IN REEL WITH
PAPER INTERLEAF

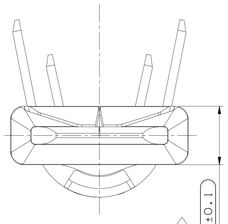

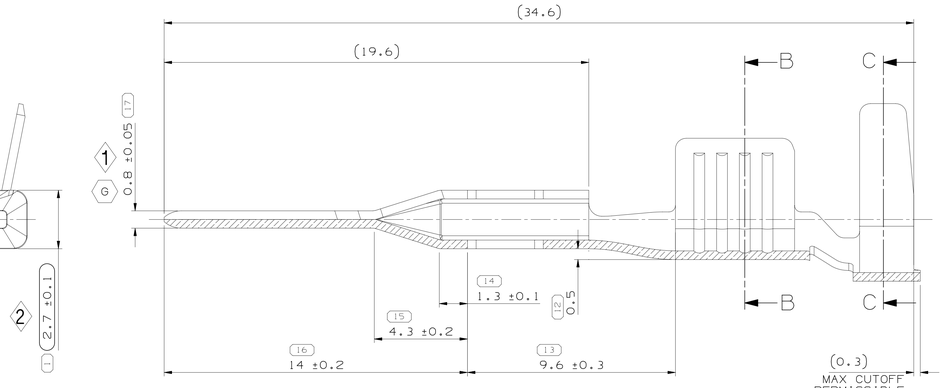

SECTION A-A

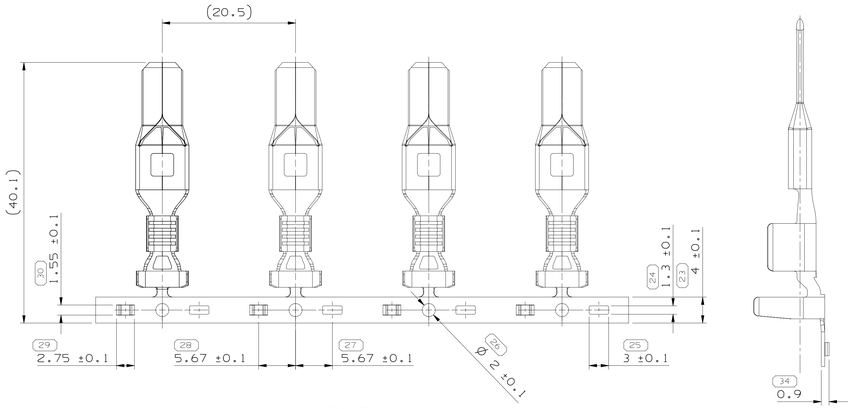

SCALE 3:1

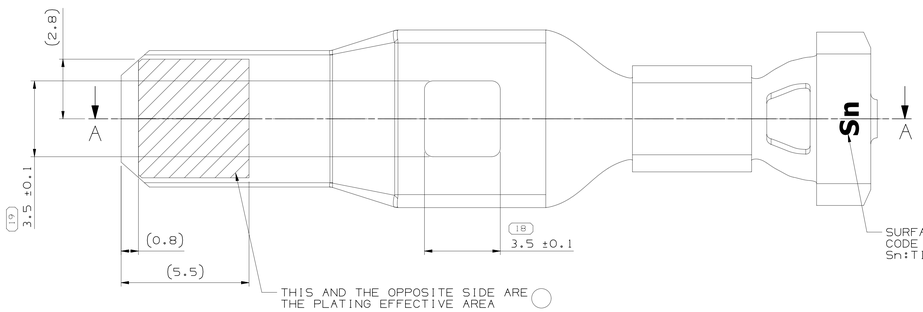

NOTES:

TERMINAL SYMMETRICAL ABOUT CENTERLINE AND CAN BE INSERTED 180°

◇ QUALITY ASSURANCE REQUIREMENTS: 2

(G) DENOTES GAGE REQUIREMENTS FOR USERS AND MANUFACTURER

REELS TRANSPORTED AND STORED HORIZONTAL RETAINING STRIP DOWN

CHANGES BASED ON TECHNICAL PROGRESS ARE IN THE DECISION OF THE MANUFACTURER

SYMBOL DEFINITION		
A DIMENSION WITHOUT AN INSPECTION REPORT SYMBOL ( ) DOES NOT REQUIRE INSPECTION. IT MAY BE CONTROLLED ON THE INDIVIDUAL COMPONENT DRAWING.	TOTAL NO OF INSPECTIONS REQUIRED	34
	LAST NO. USED	34

MISSING SYMBOLS
NO MISSING SYMBOL NUMBER

DWG STATUS						REVISION HISTORY	AUTH	DR	APVD 1	APVD 2
DATE	STG	REV	N/P	CHG	ZONE					
25AP16	R	01	-	-	-	INITIAL RELEASE		BHC	JJY	PJH
05DE16	R	01	AA	-	C12	APPOINTED THE PLATING EFFECTIVE AREA		BHC	JJY	PJH

PART NO.	REV.	SURFACE FINISH	CRIMP SIZE (mm²)	CRIMP CODE	B1	B2	H1	H2	D1	D2	MATERIAL	PART NO.	COLOR	INSULATION Ø(mm²)
33341386	01	SILVER PLATING 1.2-3μm Ag PRE-PLATING OR 5-7μm Ag POST-PLATING	3.0-5.0	II	4.9	8.0	5.6	8.2	2.6	5.3	CuSn0.15 C14415	15324993 OR 15324996 OR 15324994	GREEN / BLUE / GRAY	4.4-5.15 / 3.61-4.5 / 2.81-3.75
33341385	01	TIN PLATING 1-3μm Sn												
												APPLICATION WITH SINGLE WIRE SEAL		

DIN ISO 2768	Tolerance Class medium (m)						
Linear Dimensions except for broken edges	Permissible deviations for basic size range (mm)						
	0.5 *) up to 3	over 3 up to 6	over 6 up to 30	over 30 up to 120	over 120 up to 400	over 400 up to 1000	over 1000 up to 2000
	±0.1	±0.1	±0.2	±0.3	±0.5	±0.8	±1.2
Broken edges (radii, chamfers)	Permissible deviations for basic size range (mm)						
	0.5 *) up to 3	over 3 up to 6			over 6		
	±0.2	±0.5			±1		
	Permissible deviations for ranges of lengths, in mm, of the shorter side of the angle concerned						
Angular dimensions	up to 10	over 10 up to 50	over 50 up to 120		over 120 up to 400	over 400	
	±1°	±0° 30'	±0° 20'		±0° 10'	±0° 5'	

*) For nominal sizes below 0.5mm, the deviations shall be indicated adjacent to the relevant nominal size(s).

PROCESS SENSITIVE DIMENSION
DIMENSIONS ENCLOSED IN ( ) INDICATE REFERENCE DIMENSIONS AND NO TOLERANCE LIMITS ARE ESTABLISHED

DIMENSIONAL RANGE (MM)	CHART ID
FROM 0 TO 12	12
TOLERANCE UNLESS OTHERWISE SPECIFIED ±0.1 ANGULAR TOLERANCE ±2°	12-2

THIRD ANGLE PROJECTION

DO NOT SCALE
USE MATH DATA

A ——— LINE DRAWN THROUGH A PART NUMBER INDICATES THAT PHYSICAL PARTS ARE NOT AVAILABLE FOR ORDERING.

PART NUMBERS THAT DO NOT HAVE A LINE PRESENT INDICATE THAT PHYSICAL PARTS ARE AVAILABLE FOR ORDERING.

CONTACT APTIV SALES TO ASSURE AVAILABILITY OF PARTS.

DWG TYPE: PART DRAWING

STYLE:

VOLUME (CM³): DISTR CODE: D

UNLESS OTHERWISE SPECIFIED
THIS DOCUMENT IS IN ACCORDANCE WITH ASME Y14.5M-1994 AS AMENDED BY THE DM GLOBAL DIMENSIONING AND TOLERANCING ADDENDUM-2001. SEPARATE PATTERNS OF FEATURES MAY BE IMAGED SEPARATELY REGARDLESS OF DATUM REFERENCES.

ALL DIMENSIONS ARE IN MILLIMETERS

REFERENCE

•APTIV•
DELPHI PACKARD ELECTRICAL/ELECTRONIC ARCHITECTURE
Chennai, India
COPYRIGHT 2016 DELPHI CORPORATION AND/OR ITS AFFILIATES. ALL RIGHTS RESERVED.
THIS DRAWING IS THE PROPERTY OF DELPHI CORPORATION AND CONTAINS DELPHI CONFIDENTIAL INFORMATION. THE REPRODUCTION, DISTRIBUTION AND UTILIZATION OF THIS DOCUMENT OR ITS RELATED CAD MATH DATA, AS WELL AS COMMUNICATION OF ANY CONTENT TO OTHERS, WITHOUT EXPRESS AUTHORIZATION, IS PROHIBITED.

		DATE
DR	BAEK,HYUN-CHUL	05DE16
APVD1	BAEK,HYUN-CHUL	05DE16
APVD2	JUNG,JAE-YUP	05DE16
APVD3	PARK,JOO-HYUN	05DE16
APVD4		
APVD5		

SUBSTANCES OF CONCERN AND RECYCLED CONTENT PER DELPHI (1947001)

MATERIAL: SEE TABLE

DRAWING NAME: HETS 6.3 MALE TERMINAL SWS VERSION

DRAWING NUMBER: 33341383

SIZE	SCALE	FRAME NO	SHEET NO	STG	REV	N/P
A0	10:1	1 OF 1	1 OF 1	R	01	AA