SUITABLE TERMINALS						
TERMINAL SIZE	TERMINAL TYPE	PART NUMBER	WIRE SIZE (MM²)	WIRE TUBE USED	PLATING	SUITABLE CAVITY PLUGS
1.5	8 X GTS 1.5 FEMALE TERMINAL	35692608	0.50-0.85	13779855	Ag	13826722
		35692609	1.00-1.30	13779855		
		35692610	2.0	N/A		
		13613755	0.50-0.85	13779855	Sn	
		13613762	1.00-1.30	13779855		
		13647381	2.0	N/A		
0.64	40 X GTS 064 FEMALE TERMINAL	35692606	0.35	N/A	Ag	13768626
		35692607	0.50	N/A		
		13955989	0.35	N/A	Sn	
		13648598	0.50	N/A		

SYMBOL DEFINITION		
A DIMENSION WITHOUT AN INSPECTION REPORT SYMBOL (13) DOES NOT REQUIRE INSPECTION. IT MAY BE CONTROLLED ON THE INDIVIDUAL COMPONENT DRAWING.	TOTAL NO OF INSPECTIONS REQUIRED	13
	LAST NO. USED	13

MISSING SYMBOLS

NO MISSING SYMBOL NUMBER

DWG STATUS						REVISION HISTORY	AUTH	DR	APVD 1	APVD 2
DATE	STG	REV	N/P	CHG	ZONE					
27DE22	R	01	-			CREATED CUSTOMER ASSEMBLY DRAWING			SHR	HW
24JL23	R	01	AA	-		ADD CAVITY PLUG PN FOR GTS 1.5 CAVITY.		ZML	HW	YBC
24JL23	R	01	AB	-		NOTES UPDATED.	449285	ZML	HW	YBC
19DE23	R	01	AC	-		DELETE PE PN OF TERMINALS.	450060	ZML	HW	YBC

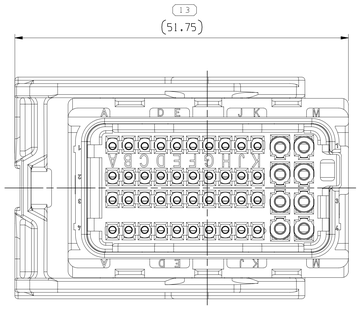

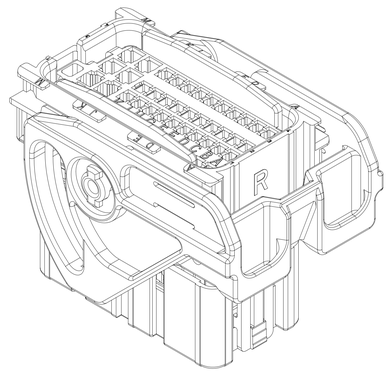

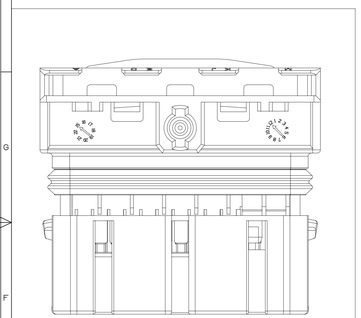
VIEW WITHOUT LEVER

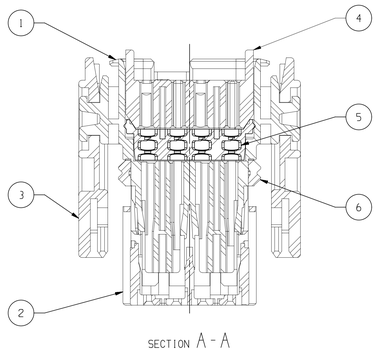

SECTION A-A

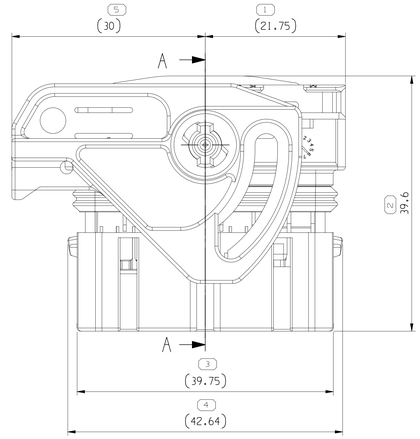

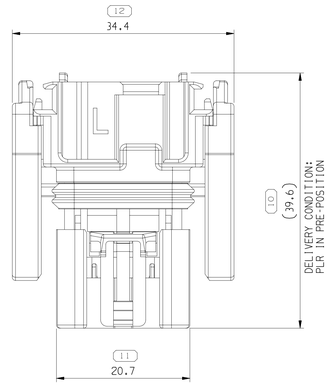

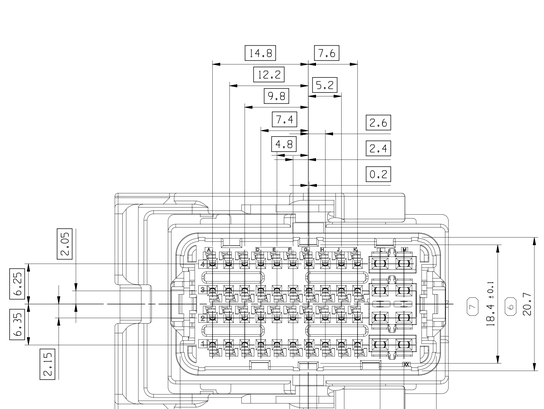

NOTES:

1. UNLESS OTHERWISE SPECIFIED AND/OR INDICATED:

   DIMENSIONS ARE TO FACE OF VIEW SHOWN AND AUTOMATICALLY ROUNDED BY COMPUTER FOR INSPECTION (SEE MATH MODEL FOR PRECISE DIMENSIONS). FOR TOOL OTHER DIMENSIONS NOT SHOWN BUT REQUIRED FOR TOOL BUILD, SEE MATH MODEL FOR PRECISE TOOL PATH DATA.
   ALL RADII 0.5
   ALL CHAMFERS 0.5 X45°
   DRAFT IS .5° MAX ON ALL OUTSIDE SURFACE.
   LIKE CAVITIES ARE INDENTICAL.

2. MATERIAL RECYCLING CODE PER ISO 11469. (1.1)X(0.1) CHARACTERS AS SHOWN TO BE LOCATED ON ANY EXTERIOR SURFACE.

3. THIS ASSEMBLY ACCEPTS THE FOLLOWING PARTS:

   48W COVER 45° - 35688401.

ASSEMBLY PART NUMBER	ASSEMBLY PART NAME	REV.	CODING	ITEM NO.	PART NUMBER	PART NAME	PART REV.
35688398	ASM CONN 48 F GTS 0.64 1.5	01	A	6	33503364	CONNECTOR SEAL	01
				5	33507962	BLOCK SEAL	01
				4	35703768	SEAL RETAINER	01
				3	35703765	LEVER	01
				2	35703774	PLR	01
				1	35703766	48W FEMALE HOUSING	01

A LINE DRAWN THROUGH A PART NUMBER INDICATES THAT PHYSICAL PARTS ARE NOT AVAILABLE FOR ORDERING.

PART NUMBERS THAT DO NOT HAVE A LINE PRESENT INDICATE THAT PHYSICAL PARTS ARE AVAILABLE FOR ORDERING.

CONTACT APTIV SALES TO ASSURE AVAILABILITY OF PARTS.

DWG TYPE: CUSTOMER PART DRAWING

STYLE

VOLUME (CM³) | DISTR CODE

UNLESS OTHERWISE SPECIFIED
THIS DOCUMENT IS IN ACCORDANCE WITH ASME Y14.5 2009. SEE APTIV ENGINEERING DESIGN STANDARD B6 2017 FOR ISO 11012004 RECONCILIATION REQUIREMENTS.

ALL DIMENSIONS ARE IN MILLIMETERS

(12) PROCESS SENSITIVE DIMENSION

DIMENSIONS ENCLOSED IN ( ) INDICATE REFERENCE DIMENSIONS AND NO TOLERANCE LIMITS ARE ESTABLISHED

REFERENCE

DIMENSIONAL RANGE (MM)									CHART M
FROM	>0	>6	>30	>70	>120	>160	>200	>250	>315
TO	6	30	70	120	160	200	250	315	400
TOLERANCE UNLESS OTHERWISE SPECIFIED									
	±0.1	±0.2	±0.3	±0.4	±0.45	±0.55	±0.7	±0.85	±1.05
ANGULAR TOLERANCE ±1°									

THIRD ANGLE PROJECTION

DO NOT SCALE

USE MATH DATA

NX

•APTIV•

CONNECTION SYSTEMS
Chennai, India

COPYRIGHT 2022 APTIV. ALL RIGHTS RESERVED.

THIS DRAWING IS THE PROPERTY OF APTIV AND CONTAINS APTIV CONFIDENTIAL INFORMATION. THE REPRODUCTION, DISTRIBUTION AND UTILIZATION OF THIS DOCUMENT OR ITS RELATED MATH DATA, AS WELL AS COMMUNICATION OF ANY CONTENT TO OTHERS, WITHOUT EXPRESS AUTHORIZATION, IS PROHIBITED.

	DATE
DR	
APVD1 HANIF ROSHAN	27DE22
APVD2 HAO WANG	27DE22
APVD3 JONNY ZHENG	27DE22
APVD4	
APVD5	

SUBSTANCES OF CONCERN AND RECYCLED CONTENT PER APTIV 109490[1]

MATERIAL: SEE CHART

DRAWING NAME: ASM CONN 48 F/F GTS 0.64 1.5 SLD

DRAWING NUMBER: 35688398

SIZE	SCALE	FRAME NO	SHEET NO	STG	REV	N/P
A0	3:1	1 OF 1	1 OF 1	R	01	AC

User: C_PKN
Plot Date: 22-Dec-23 Time: 01:43:03
C:\Users\C_PKN\Desktop\35688398_C1801_SD_01_AC.dwg