DRAWING NUMBER *NUMERO DISEGNO*	FSA 309637	REVISION *REVISIONE*	B	SHEET *FOGLIO*	1/1	APPROVAL LEVEL *LIV. DI APPROVAZIONE*	-
DRAWING *DISEGNO*	C						

DEPHI P/N	MVL P/N
13761318	MCSFNG01

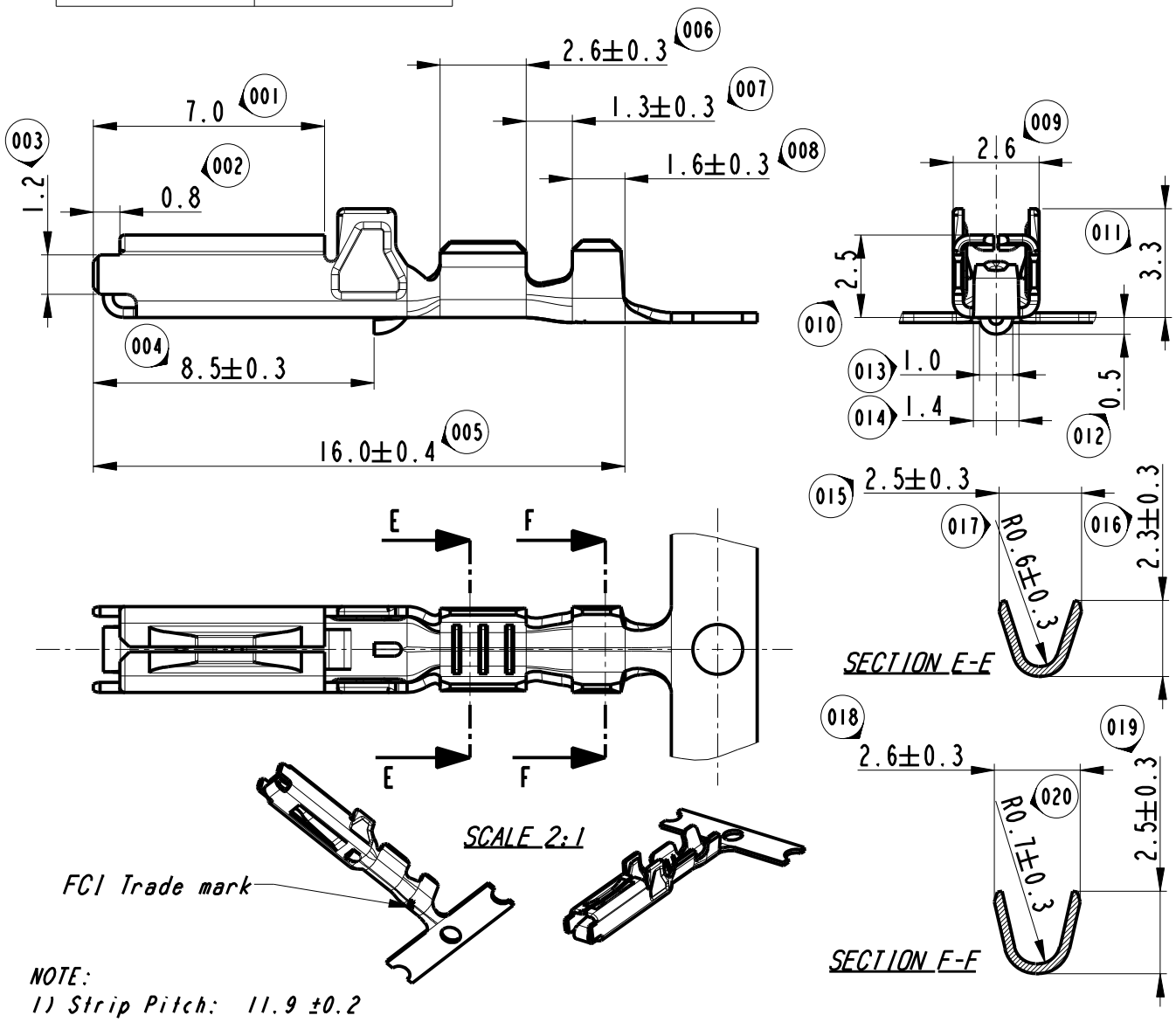

NOTE:

1) Strip Pitch: 11.9 ±0.2

2) Material: CuZn30 Brass Pre Tin Plated Thk. 2.5 ÷ 5.5 micron
Raw Material Thickness 0.30 mm

3) Wire size range: 0.35 ÷ 0.5 mm²

5) Female Terminal suitable for male terminals with thickness 0.64±0.1 and width 1.7±0.2 mm

6) Reference FIAT Specification: 91343/44

ECN-NO. *NUMERO. -ECN*	DATE DD/ MM / YY *DATA*	REVISION *REVISIONE*	POSITION *POSIZIONE*	CHANGE DESCRIPTION *DESCRIZIONE MODIFICA*	DRAWN BY *DISEGNATORE*	CHK. BY *CONTROLLATO*	APPR. BY *APPROVATO*
CR-16/5199	11-10-2016	B		UPDATED FRAME AND ADDED DPN	F.G.		G.I.
12-00190	10/02/12	A		Changed logo and its position	E.C.		M.C.
ECN 64/05	20/09/05	03		See ECN Documents	C.Z.	C.S.	
ECN 51/04	28/09/04	02		Release for Production	C.Z.	C.S.	
-	01/12/03	01		Added balloon (Dimensional Report)	C.Z.	C.S.	

PRODUCT SPEC. *SPEC. DI PRODOTTO*	PACKAGING SPEC. *SPEC. DI IMBALLAGGIO*	APPLICATION SPEC. *SPEC. DI APPLICAZIONE*
IPS 253	-	-

COPYRIGHT DELPHI CORPORATION AND/OR ITS AFFILIATES. ALL RIGHTS RESERVED. REVISED
THIS DRAWING IS THE PROPERTY OF DELPHI CORPORATION. THE REPRODUCTION, DISTRIBUTION AND UTILIZATION OF THIS DOCUMENT OR ITS RELATED CAD MATH DATA, AS WELL AS COMMUNICATION OF ANY CONTENT TO OTHERS, WITHOUT EXPRESS AUTHORIZATION IS PROHIBITED.
QUESTO DISEGNO E' PROPRIETA' DI DELPHI CORPORATION E CONTIENE INFORMAZIONI CONFIDENZIALI. LA RIPRODUZIONE, DISTRIBUZIONE E UTILIZZAZIONE DI QUESTO DOCUMENTO O DELLE SUE RELATIVE MATEMATICHE CAD, NONCHE LA COMUNICAZIONE DI QUALSIASI CONTENUTO AD ALTRI, SENZA ESPLICITA AUTORIZZAZIONE, E PROIBITA

TOLERANCES *TOLLERANZE*	± 0.2mm / ±2°
COUNTERPART Nr. *CONTROPARTE Nr.*	
MATERIAL : *MATERIALE :*	CuZn30 pre tinned
COLOUR : *COLORE :*	-
SURFACE FINISH *FINITURA SUPERFICIALE*	-
DO NOT SCALE DRAWING *DISEGNO FUORI SCALA*	
TOOL NO.	-
LOC. CODE *NAZIONALITA'*	IT

DELPHI
DELPHI PACKARD ELECTRICAL/ELECTRONIC ARCHITECTURE
TORINO, ITALY

CAD SYSTEM: pro / eng.

ISO PROJECTION *PROIEZIONE ISO* | DIMENSION IN MILLIMETERS *DIMENSIONI IN MILLIMETRI* | DWG SIZE *FORMATO*: A4

	DATE *DATA*	NAME *NOME*
DRAWN BY *DISEGNATORE*	01/04/03	C.Zen
CHECKED BY *CONTROLLATO*	01/04/03	C.Stella
APPROVED BY *APPROVATO*		

TITLE *DESCRIZIONE*: MCS 070 Female Terminal
New Generation Version

DRAWING NUMBER *NUMERO DISEGNO*: FSA 309637

SHEET *FOGLIO*: 1 of *di* 1

ESR NO. *NUMERO ESR*: EU020105 | CAT. NO. *NUMERO CAT.*: SEE TABLE | FILE NAME *NOME FILE*: FSA309637 | SCALE *SCALA*: 5:1