

CODE A
SCALE 2:1

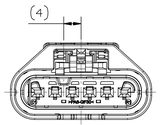

CODE B
SCALE 2:1

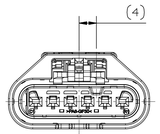

CODE C
SCALE 2:1

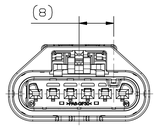

CODE D
SCALE 2:1

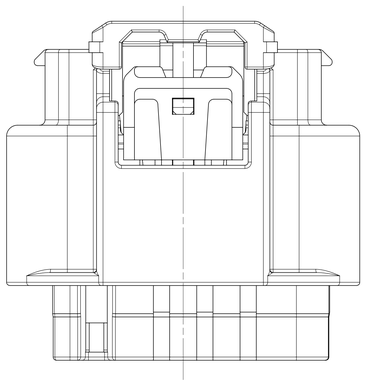

ISOMETRIC VIEW			
OPTION		WITH CPA	WITHOUT CPA
DELPHI	PART NUMBER	33355813	33356199
	PART REVISION	01	01

SYMBOL DEFINITION

A DIMENSION WITHOUT AN INSPECTION REPORT SYMBOL ( ) DOES NOT REQUIRE INSPECTION. IT MAY BE CONTROLLED ON THE INDIVIDUAL COMPONENT DRAWING.

TOTAL NO OF INSPECTIONS REQUIRED	4
LAST NO. USED	4

MISSING SYMBOLS

NO MISSING SYMBOL NUMBER

DWG STATUS DATE	STG	REV	N/P	CHG	ZONE	REVISION HISTORY	AUTH	DR	APVD1	APVD2
07JN19	R	01	-	-		INITIAL RELEASE FOR NISSAN		SYK	SJW	PJH
12AU20	R	01	AA	-	L5	UPDATED EXPLODED VIEW TOLERANCE CHANGED	206549	JJY	SJW	PJH
					G10	DIM 1 TOL WAS 0.1				
					G5	DIM 2 TOL WAS 0.05				

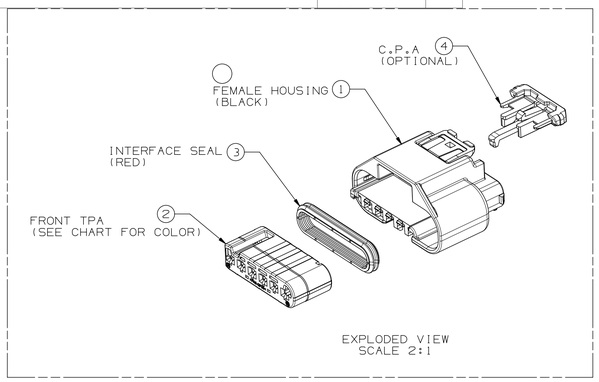

EXPLODED VIEW
SCALE 2:1

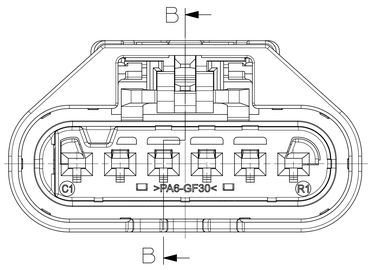

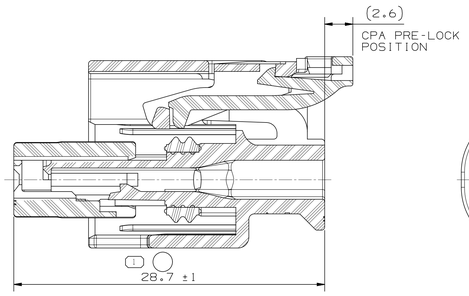

TPA PRE-LOCK POSITION

SECTION B-B

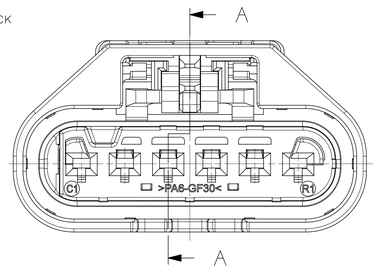

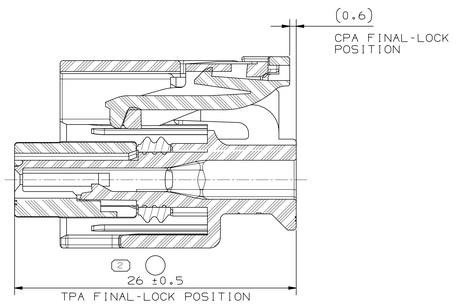

TPA FINAL-LOCK POSITION

SECTION A-A

CPA & TPA IN PRE-LOCK POSITION

CPA & TPA IN FINAL LOCK POSITION

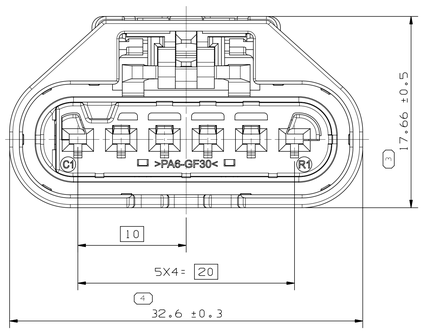

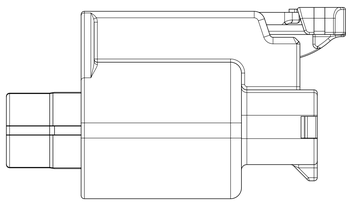

NOTES:

1. TOLERANCE MUST MEET DIN ISO 2768(m).
2. ALLOWED WIRE RANGE:
   0.3 mm² TO 1.25 mm² (JASO WIRE)
3. APPLICABLE TERMINAL: REFER TABLE OF ASSOCIATED PARTS
4. APPLICABLE CABLE SEAL : REFER TABLE OF CABLE SEAL

ASSOCIATED PARTS				
FEMALE TERMINAL		PART NUMBER	WIRE SIZE (mm²)	TYP (AWG)
APEX 1.2	TIN	35355738	0.75 - 1.25	16
				18
		35355740	0.3 - 0.5	20
				22
	SILVER STRIPE, SPOT	35355745	0.75 - 1.25	16
				18
		35355747	0.3 - 0.5	20
				22
	GOLD STRIPE, SPOT	35355749	0.75 - 1.25	16
				18
		35355751	0.3 - 0.5	20
				22

CABLE SEAL					
TYPE	PART NUMBER	WIRE SIZE (mm²)	INSULATION(Ø)	COLOR	REMARKS
LONG	33513680	0.3 ~ 0.35	1.2 ~ 1.5	RED	
	33511838	0.5 ~ 0.85	1.6 ~ 1.9	GRAY	
	33513681	1.0 ~ 1.5	2.0 ~ 2.4	YELLOW	
DUMMY SEAL	33402443	-	-	WHITE	
	35020635	-	-	GRAY	
SHORT	60993913	0.35 ~ 0.5	1.2 ~ 1.6	RED	
	60993928	0.5 ~ 0.75	1.6 ~ 1.9	GRAY	
	60993934	1.0 ~ 1.5	1.9 ~ 2.4	YELLOW	
	33318278	0.3 ~ 0.35	1.2 ~ 1.5	GRAY	OPTIONAL
	33318279	0.5 ~ 0.85	1.6 ~ 1.9	LIGHT GRAY	
	33318275	1.0 ~ 1.5	2.0 ~ 2.4	BLACK	

TYPE	ASSEMBLY	CODING TYPE	① HOUSING P/NO	MATERIAL	COLOR	② TPA P/NO	MATERIAL	COLOR	③ INTERFACE SEAL P/NO	MATERIAL	COLOR	④ CPA (OPTIONAL) P/NO	MATERIAL	COLOR
WITH CPA	33355813	A	33390979	PA6 GF30	BLACK	33390984	PA6 GF30	ROYAL BLUE	33355827	SILICONE RUBBER	RED	33219398	PA66 GF35%	GRAY
	33355815	B				33390985		BROWN						
	33355817	C				33390986		LT GRAY						
	33355818	D				33390987		RED						
WITHOUT CPA	33356199	A				33390984		ROYAL BLUE				-		
	33356200	B				33390985		BROWN						
	33356201	C				33390986		LT GRAY						
	33356202	D				33390987		RED						

DIN ISO 2768	Tolerance Class Fine (m)						
Linear Dimensions except for broken edges	Permissible deviations for basic size range (mm)						
	0.5 *) up to 3	over 3 up to 6	over 6 up to 30	over 30 up to 120	over 120 up to 400	over 400 up to 1000	over 1000 up to 2000
	±0.1	±0.1	±0.2	±0.3	±0.5	±0.8	±1.2
Broken edges (radii, chamfers)	Permissible deviations for basic size range (mm)						
	0.5 *) up to 3		over 3 up to 6			over 6	
	±0.2		±0.5			±1	
	Permissible deviations for ranges of lengths, in mm, of the shorter side of the angle concerned						
Angular dimensions	up to 10	over 10 up to 50	over 50 up to 120		over 120 up to 400		over 400
	±1°	±0° 30'	±0° 20'		±0° 10'		±0° 5'
*) For nominal sizes below 0.5mm, the deviations shall be indicated adjacent to the relevant nominal size(s).							

PROCESS SENSITIVE DIMENSION

DIMENSIONS ENCLOSED IN ( ) INDICATE REFERENCE DIMENSIONS AND NO TOLERANCE LIMITS ARE ESTABLISHED

DIMENSIONAL RANGE (MM) FROM	> 0 TO 6	>6 TO 30	>30 TO 70	>70 TO 100	>100 TO 150	>150 TO 200	>200 TO 250	>250 TO 300	>300 TO 400
TOLERANCE UNLESS OTHERWISE SPECIFIED	±0.15	±0.2	±0.3	±0.4	±0.5	±0.6	±0.8	±1	±1.2
ANGULAR TOLERANCE ±2°									

THIRD ANGLE PROJECTION

DO NOT SCALE

USE MATH DATA

NX

A ~~ LINE DRAWN THROUGH A PART NUMBER INDICATES THAT PHYSICAL PARTS ARE NOT AVAILABLE FOR ORDERING.

PART NUMBERS THAT DO NOT HAVE A LINE PRESENT INDICATE THAT PHYSICAL PARTS ARE AVAILABLE FOR ORDERING.

CONTACT APTIV SALES TO ASSURE AVAILABILITY OF PARTS.

DWG TYPE: CUSTOMER PART DRAWING

STYLE

VOLUME (CM³) | DISTR CODE

UNLESS OTHERWISE SPECIFIED

THIS DOCUMENT IS IN ACCORDANCE WITH ASME Y14.5M-1994 AS AMENDED BY THE GM GLOBAL DIMENSIONING AND TOLERANCING ADDENDUM-2001. SEPARATE PATTERNS OF FEATURES MAY BE GAGED SEPARATELY REGARDLESS OF DATUM REFERENCES.

ALL DIMENSIONS ARE IN MILLIMETERS

REFERENCE

•APTIV•

CONNECTION SYSTEMS

Hamyang, Korea

COPYRIGHT 2019 APTIV. ALL RIGHTS RESERVED.

THIS DRAWING IS THE PROPERTY OF APTIV AND CONTAINS APTIV CONFIDENTIAL INFORMATION. THE REPRODUCTION, DISTRIBUTION AND UTILIZATION OF THIS DOCUMENT OR ITS RELATED CAD MATH DATA, AS WELL AS COMMUNICATION OF ANY CONTENT TO OTHERS, WITHOUT EXPRESS AUTHORIZATION, IS PROHIBITED.

		DATE
DR	SUNG,YUN-KYU	07JN19
APVD1	SEO,JU-WON	07JN19
APVD2	PARK,JOO-HYUN	07JN19
APVD3		
APVD4		
APVD5		

SUBSTANCES OF CONCERN AND RECYCLED CONTENT PER APTIV [094900]

MATERIAL: SEE NOTES

DRAWING NAME: APEX1.2 6WAY FEMALE CONNECTOR ASSY

DRAWING NUMBER: 35375204

SIZE	SCALE	FRAME NO	SHEET NO	STG	REV	N/P
A0	5:1	1 OF 1	1 OF 1	R	01	AA