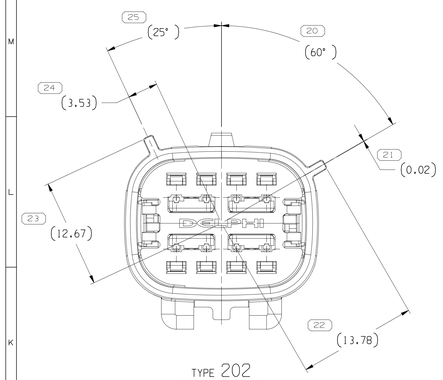

TYPE 202
SAME AS TYPE 101
AXCEPT AS SHOWN

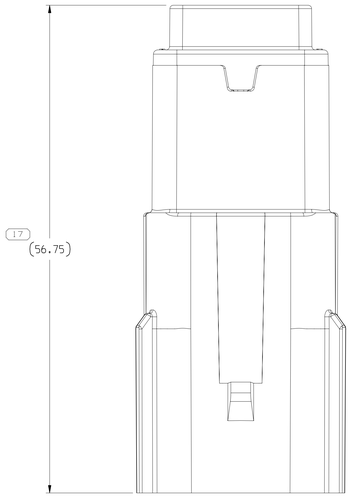

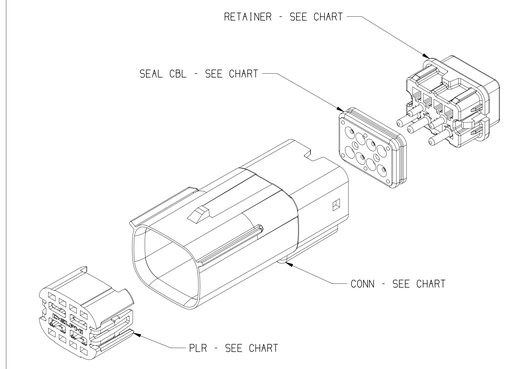

EXPLODED VIEW
SCALE 2:1

SYMBOL DEFINITION

A DIMENSION WITHOUT AN INSPECTION REPORT SYMBOL (XX) DOES NOT REQUIRE INSPECTION. IT MAY BE CONTROLLED ON THE INDIVIDUAL COMPONENT DRAWING.

TOTAL NO OF INSPECTIONS REQUIRED	36
LAST NO. USED	25

MISSING SYMBOLS

NO MISSING SYMBOL NUMBER

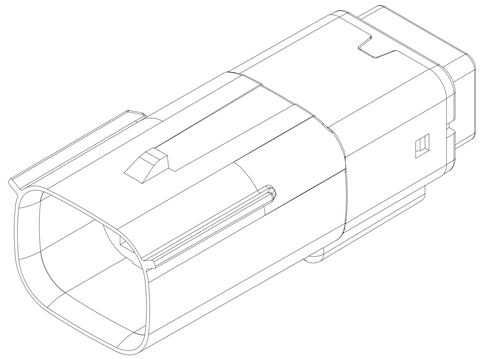

DWG STATUS					ZONE	REVISION HISTORY	AUTH	DR	APVD 1	APVD 2
DATE	STS	REV	N/P	CHG						
12DE19	R	01	-	-		ALL PARTS - RELEASED PART DRAWING	550447	JLL	JAA	JCA
01AP20	R	02	-	-		35410563 & 35410570-71 - UPDATED PART AVAILABILITY	551422	JAA	JAA	JCA
23JN20	R	03	-	-		35464978-79 - RELEASED	551670	JGO	JAA	JCA
19JA21	R	04	-	-		35464979 - UPDATED PART AVAILABILITY	553363	GLG	GLG	SV
09FE21	R	05	-	-		35410551 & 35464978 - UPDATED PART AVAILABILITY	553510	GDH	JGM	SV
10OC21	R	06	-	-		35603804 - RELEASED	555502	GDH	JAA	SV
22DE21	R	07	-	-		35617120-23 - RELEASED	555976	JGO	JGO	SV
14JA22	R	08	-	-		35603804 - UPDATED PART AVAILABILITY	556294	JGO	JAA	SV
25JA22	R	09	-	-		35635315, 35635317, 35635319 & 35635321 - RELEASED	556215	JGO	JAA	SV
17FE22	R	10	-	-		35645532 - RELEASED	556605	AHY	JAA	SV
04MR22	R	11	-	-		35645532 & 35410574 - UPDATED PART AVAILABILITY (P/N WAS NOT AVAILABLE)	556658	GDH	JAA	SV
31MY22	R	12	-	-		35635317 - UPDATED PART AVAILABILITY (P/N WAS NOT AVAILABLE)	557590	GLG	GLG	SV
20JN22	R	13	-	-		35682577 - RELEASED	557750	ESG	JAA	SV
15AU22	R	14	-	-		35635315 - UPDATED PART AVAILABILITY (P/N WAS NOT AVAILABLE)	558208	DRA	JAA	SV
17MR23	R	15	-	-		35761482 - RELEASED	559877	JGO	CGD	MFA
11SE23	R	16	-	-		35410567 - UPDATED PART AVAILABILITY (PN WAS NOT AVAILABLE)	561786	AHY	JAA	MFA
09OC23	R	17	-	-		35682577 - UPDATED PART AVAILABILITY (P/N WAS NOT AVAILABLE)	562092	GDH	JAA	MFA
16JA24	R	18	-	-		35852208 - RELEASED	562922	LGD	MLR	MFA

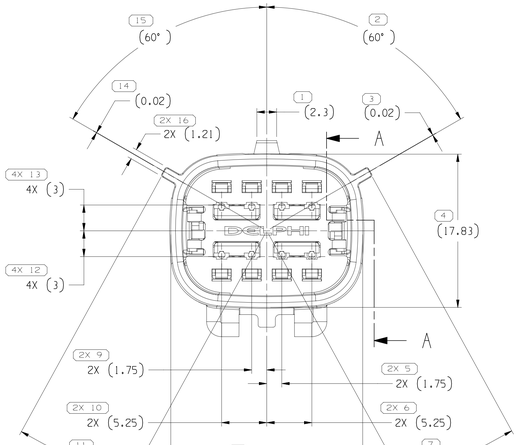

TYPE 201

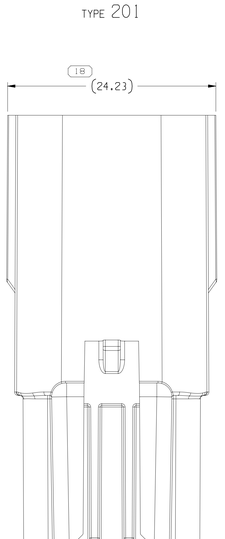

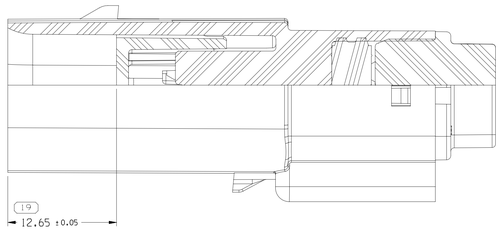

SECTION A-A

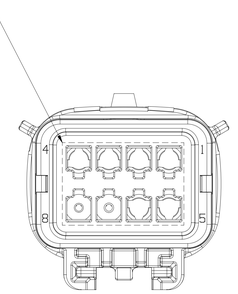

NOTES

1. UNLESS OTHERWISE SPECIFIED AND/OR INDICATED:

   DIMENSIONS ARE TO FACE OF VIEW SHOWN AND AUTOMATICALLY ROUNDED BY COMPUTER FOR INSPECTION (SEE MATH MODEL FOR PRECISE DIMENSIONS). FOR ALL OTHER DIMENSIONS NOT SHOWN BUT REQUIRED FOR TOOL BUILD, SEE MATH MODEL FOR PRECISE TOOL PATH DATA.

2. THIS PRODUCT IS NOT CATEGORIZED AS AN APPEARANCE ITEM, MINOR IMPERFECTIONS INCLUDING, BUT NOT LIMITED TO, FLOW MARKS, COLOR BLEMISHES, GATE VESTIGE, AND SOFT FLASH THAT DO NOT AFFECT THE FIT, FORM, OR FUNCTION OF THE PART ARE PERMISSIBLE PER EANP_4-3_CS_01_EN.

3. PART IS MANUFACTURED TO GEOMETRIC TOLERANCES. CENTERLINE DIMENSIONS ARE FOR REFERENCE ONLY.

4. SEALING CODE 4 - DESIGN WILL MEET REQUIREMENTS OF SAE/USCAR-2 CONNECTOR SYSTEM ENVIRONMENTAL TEST FLOWCHART (PRESSURE/VACUUM AND SUBMERSION).

5. FOR APPLICATION DATA SEE THE INDIVIDUAL APPLICATION DRAWINGS.

6. FOR ALL OPEN CAVITY VERSIONS SEE SHEET 1

7. FOR ASSEMBLIES WITH 7MM CLIP SLOT SEE DRAWING 15514658

PART NO	REV	N/P	TYPE	MALE CONN	PLR	RETAINER	SEAL CBL	BLOCKED CAVITIES 1	2	3	4	5	6	7	8	TOTAL OF BLOCKED CAVITIES	USCAR OPTION
35852208	01	-	201	35117266	15514686	35852212	15514682	-	-	-	X	-	-	-	-	1	A
35761482	01	-	201	35117266	15514686	35761478	15514682	X	X	X	X	X			X	6	A
35682577	01	AA	201	35117266	15514686	35682576	15514682	X	X	X	-	X	X	-	X	6	A
35645532	01	AA	201	35117266	15514686	35645531	15514682	-	-	-	-	-	-	X	X	2	A
35635321	01	-	201	35117266	15514686	35635320	15514682	X	-	-	-	X	-	-	-	2	A
35635319	01	-	201	35117266	15514686	35635318	15514682	X	-	-	-	X	X	X	X	5	A
35635317	01	AA	201	35117266	15514686	35635316	15514682	-	-	-	X	-	-	X	X	3	A
35635315	01	AA	201	35117266	15514686	35635314	15514682	-	-	-	X	X	X	X	X	5	A
35617123	01	-	201	35117266	15514686	35617084	15514682	-	-	X	X	-	-	-	-	2	A
35617122	01	-	201	35117266	15514686	35617083	15514682	X	X	X	X	-	-	-	-	4	A
35617121	01	-	202	35117267	15514686	35617082	15514682	X	-	-	-	-	X	-	-	2	B
35617120	01	-	202	35117267	15514686	35617081	15514682	X	-	-	-	-	-	-	-	1	B
35603804	01	AA	201	35117266	15514686	35603789	15514682	-	-	-	-	-	X	X	X	3	A
35464979	01	AA	201	35117266	15514686	35464975	15514682	-	X	X	-	X	-	-	X	4	A
35464978	01	AA	201	35117266	15514686	35464974	15514682	X	-	-	-	-	-	-	-	1	A
35410574	01	AA	201	35117266	15514686	35410607	15514682	-	-	-	-	X	X	-	X	3	A
35410571	01	AA	201	35117266	15514686	35410604	15514682	X	-	X	X	-	-	X	X	5	A
35410570	01	AA	201	35117266	15514686	35410603	15514682	X	-	-	X	-	-	-	-	2	A
35410569	01	-	201	35117266	15514686	35410602	15514682	X	X	-	-	X	X	-	X	5	A
35410568	01	-	201	35117266	15514686	35410601	15514682	X	X	X	X	-	-	X	-	5	A
35410567	01	AA	201	35117266	15514686	35410600	15514682	X	X	-	-	-	-	-	-	2	A
35410563	01	AA	201	35117266	15514686	15514674	15514682	X	X	X	X	X	X	X	X	8	A
35410551	01	AA	201	35117266	15514686	35410576	15514682	X	X	X	X	X	X	-	-	6	A
PART NO	REV	N/P	TYPE	MALE CONN	PLR	RETAINER	SEAL CBL	1	2	3	4	5	6	7	8	TOTAL OF BLOCKED CAVITIES	USCAR OPTION

BLOCKED CAVITIES

A ——— LINE DRAWN THROUGH A PART NUMBER INDICATES THAT PHYSICAL PARTS ARE NOT AVAILABLE FOR ORDERING.

PART NUMBERS THAT DO NOT HAVE A LINE PRESENT INDICATE THAT PHYSICAL PARTS ARE AVAILABLE FOR ORDERING.

CONTACT APTIV SALES TO ASSURE AVAILABILITY OF PARTS.

DWG TYPE: PART DRAWING

STYLE

VOLUME (CM³) | DISTR CODE

UNLESS OTHERWISE SPECIFIED
THIS DOCUMENT IS IN ACCORDANCE WITH ASME Y14.5-2009. SEE APTIV ENGINEERING DESIGN STANDARD 86-2017 FOR ISO 11011:2004 RECONCILIATION REQUIREMENTS.

ALL DIMENSIONS ARE IN MILLIMETERS

(N/A) PROCESS SENSITIVE DIMENSION

DIMENSIONS ENCLOSED IN ( ) INDICATE REFERENCE DIMENSIONS AND NO TOLERANCE LIMITS ARE ESTABLISHED

REFERENCE

DIMENSIONAL RANGE (MM)								CHART ED
FROM TO	> 0 20	> 20 30	> 30 70	> 70 100	> 100 150	> 150 200	> 200 250	> 250 300	> 300 400
TOLERANCE UNLESS OTHERWISE SPECIFIED								
	±0.15	±0.2	±0.3	±0.4	±0.5	±0.6	±0.8	±1	±1.2
ANGULAR TOLERANCE ±2°									

THIRD ANGLE PROJECTION

DO NOT SCALE
USE MATH DATA

NX

•APTIV•
CONNECTION SYSTEMS
WARREN, OH

COPYRIGHT 2019 APTIV, ALL RIGHTS RESERVED.
THIS DRAWING IS THE PROPERTY OF APTIV AND CONTAINS APTIV CONFIDENTIAL INFORMATION. THE REPRODUCTION, DISTRIBUTION AND UTILIZATION OF THIS DOCUMENT OR ITS RELATED CAD MATH DATA, AS WELL AS COMMUNICATION OF ANY CONTENT TO OTHERS, WITHOUT EXPRESS AUTHORIZATION, IS PROHIBITED.

		DATE
DR		
APVD1	JOSE LUIS LOPEZ	12DE19
APVD2	J.S. ALVARADO	12DE19
APVD3	JULIO ARMENDARIZ	12DE19
APVD4		
APVD5		

SUBSTANCES OF CONCERN AND RECYCLED CONT 0949001 0949001

MATERIAL: SEE DRAWING

DRAWING NAME: TAXI CONN 8 M OCS 1.5 SLD

DRAWING NUMBER: 35117278

SIZE	SCALE	FRAME NO	SHEET NO	STS	REV	N/P
A0	4:1	1 OF 1	2 OF 2	R	18	-

User: BJBell
Date: 29-Jan-24 Time: 16:03:05
Docker: 35117278_C1201_562922.dft