State		REFERENCES/ REV.						MATERIAL	CLASSE
Pre-tinned Sn 3-6 µm	MVL	211CC3S1120	B	211CC3S2120	B	211CC3S3120	B	Cu Mg 1	125 °
	APTIV	10725666	01	15368841	01	10725665	01		
Section		0.35 - 0.75		1.00 - 2.50		3.00 - 5.00			
∅ Insulation		1.30 to 2.10		2.00 to 3.00		3.20 to 4.00			
A		2.55		3.80		4.70			
B		2.60		4.00		4.95			
C± 0.10		0.60		1.00		1.00			
D± 0.30		3.85		5.40		6.45			
E		4.00		5.15		6.60			
F		1.15		1.50		1.65			
K		0.85		1.00		0.15			
L		0.75		0.20		-0.20			
M		1.40		0.85		2.30			
N		13.00		12.70		12.90			

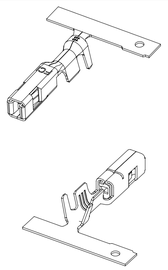

SCALE 2:1

DWG STATUS DATE	STG	REV	N/P	CHG	ZONE	REVISION HISTORY	AUTH	DR	APVD 1	APVD 2
07JN18	R	02	-	-	-	FILE TRANSLATED FROM MVL SYSTEM REDRAWN IN NX SHEET CHANGED FROM A1 TO A0		S.THA	D.LIO	D.LIO
16JL20		02	AA			UPDATED SHEET 3 WIRE PREPARATION AND CRIMP		L.DOM	A.ELM	S.BOS

NOTES:

1. Modèle représenté en gamme (1.00 à 2.50mm²)
   Model display in range (1.00 to 2.50mm²)
2. (xx) Côte non tolerancee, pour information
   (xx) No toleranced dimension, given for information
3. Conditionement: PU 061
   Packaging: PU 061

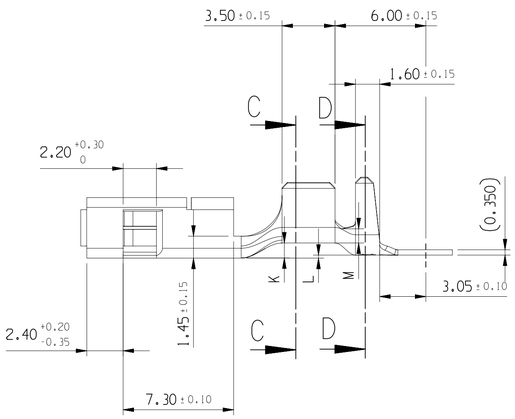

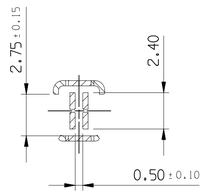

SECTION A-A

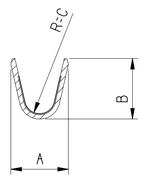

SECTION C-C

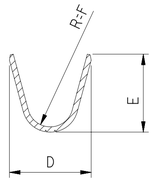

SECTION D-D

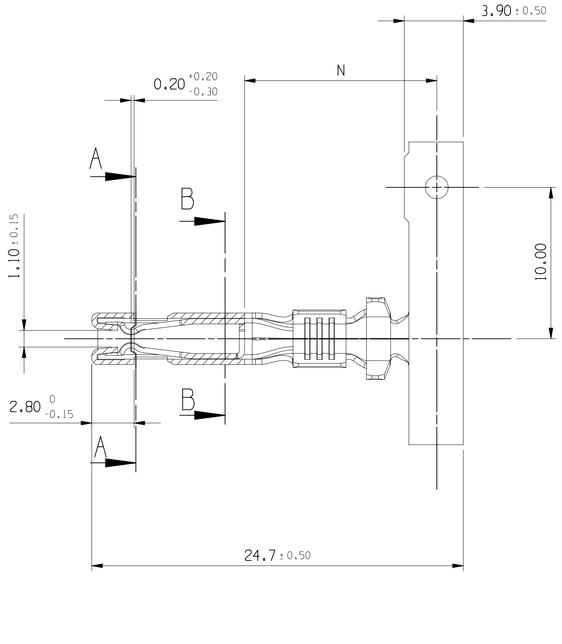

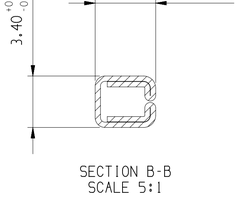

SECTION B-B
SCALE 5:1

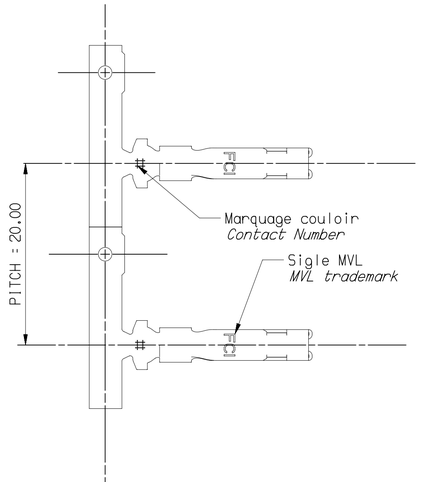

A ——— LINE DRAWN THROUGH A PART NUMBER INDICATES THAT PHYSICAL PARTS ARE NOT AVAILABLE FOR ORDERING.

PART NUMBERS THAT DO NOT HAVE A LINE PRESENT INDICATE THAT PHYSICAL PARTS ARE AVAILABLE FOR ORDERING.

CONTACT APTIV SALES TO ASSURE AVAILABILITY OF PARTS.

LA LIGNE ——— TRACÉE SUR LA RÉFÉRENCE PIÈCE INDIQUE QUE LA PIÈCE N'EST PAS DISPONIBLE À LA COMMANDE

LES RÉFÉRENCES PIÈCES QUI NE SONT PAS BARRÉES INDIQUENT QUE CELLES-CI SONT DISPONIBLES PHYSIQUEMENT POUR ÊTRE COMMANDÉES.

CONTACTER LE SERVICE COMMERCIAL DE APTIV POUR S'ASSURER DE LA DISPONIBILITÉ DES PIÈCES

DIM TO CHECK
COTES A VERIFIER

( ) DIM FOR HELP
COTES POUR INFO

THEORETIC DIM
COTES THEORIQUES

SHARP CORNER TOLERANCE

DWG TYP
CUSTOMER PART DRAWING

WEIGHT (GR)
VOLUME (CM³)
ROUTING
DISTR CODE
D

UNLESS OTHERWISE SPECIFIED

GENERAL TOLERANCES ACCORDING TO:
±0.2 ±2°

GD&T ACCORDING TO:

REFERENCE
211FT0473

FIRST ANGLE PROJECTION

DO NOT SCALE

USE MATH DATA

CAD NX

•APTIV•

CONNECTION SYSTEMS
Epernon, France

COPYRIGHT 2015 APTIV. ALL RIGHTS RESERVED.
REVISED 2018

THIS DRAWING IS THE PROPERTY OF APTIV AND CONTAINS APTIV CONFIDENTIAL INFORMATION. THE REPRODUCTION, DISTRIBUTION AND UTILIZATION OF THIS DOCUMENT OR ITS RELATED CAD MATH DATA, AS WELL AS COMMUNICATION OF ANY CONTENT TO OTHERS, WITHOUT EXPRESS AUTHORIZATION, IS PROHIBITED.

CE PLAN EST LE PROPRIETE DE DELPHI CORPORATION ET CONTIENT DES INFORMATIONS DELPHI CONFIDENTIELLES. LA REPRODUCTION, LA DISTRIBUTION ET L'UTILISATION DE CE DOCUMENT OU DE SES DONNÉES MATHÉMATIQUES CAO, AINSI QUE LA COMMUNICATION DE TOUT CONTENU À AUTRUI, SANS AUTORISATION EXPRESSE EST INTERDITE

		DATE
DR	HERNANDEZ.S	17JL03
APVD1	L DOMERGUE	27MR15
APVD2	S LACOTE	01AP15
APVD3	PATRICE CAPPE	03AP15
APVD4		
APVD5		

SUBSTANCES OF CONCERN AND RECYCLED CONTENT PER APTIV 10949001
MATIERES PROSCRITES ET CONTENU RECYCLABLE SELON DELPHI 10949001

MATERIAL
SEE TABLE

DRAWING NAME
2.8 x 0.8 FEMALE TERMINAL

SICMA 2

DRAWING NUMBER
10858318

SIZE	SCALE	FRAME NO	SHEET NO	STG	REV	N/P
A1	5:1	1 OF 1	1 OF 3	R	02	AA

CONTROLLED DOCUMENTS ARE ONLY AVAILABLE ON THE SERVER

User: cz_ds
Form: 10818-CLS09-S01/02AA Date: 16-juil.-20 Time: 13:55:06
cz_ds01_07162020_13:54:147pass.nxr