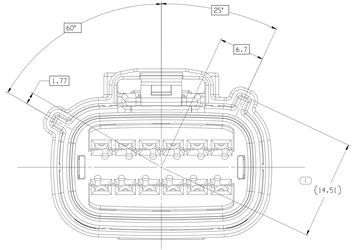

TYPE 102
SAME AS TYPE 101
EXCEPT AS SHOWN

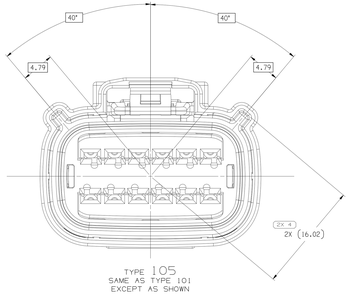

TYPE 105
SAME AS TYPE 101
EXCEPT AS SHOWN

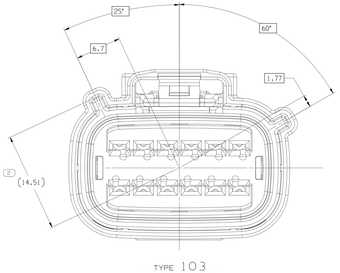

TYPE 103
SAME AS TYPE 101
EXCEPT AS SHOWN

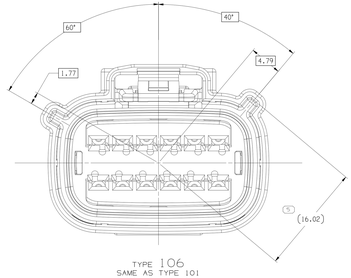

TYPE 106
SAME AS TYPE 101
EXCEPT AS SHOWN

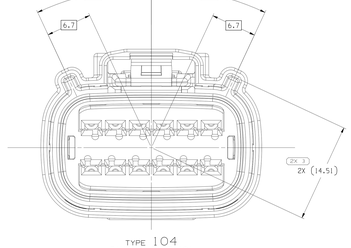

TYPE 104
SAME AS TYPE 101
EXCEPT AS SHOWN

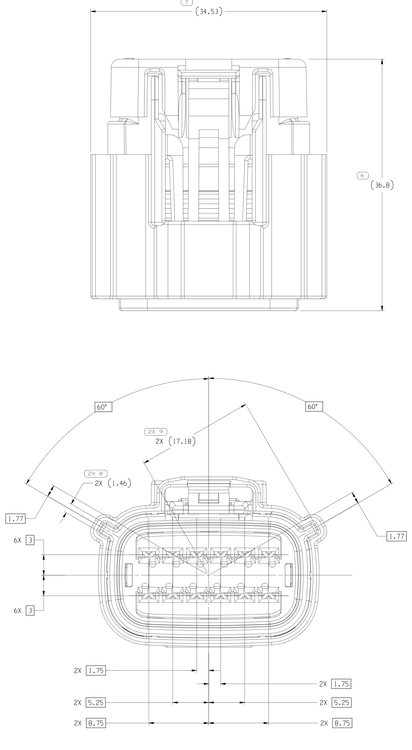

TYPE 101

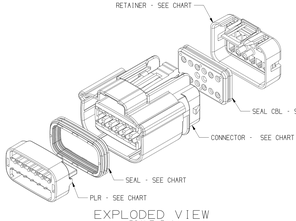

EXPLODED VIEW
SCALE 2:1

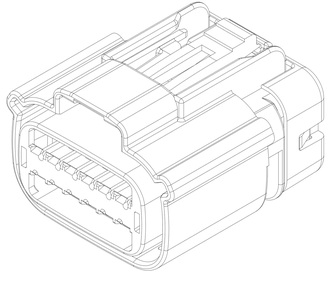

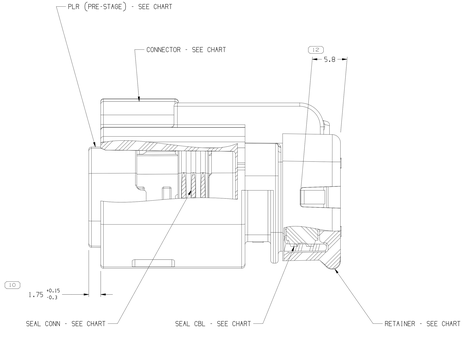

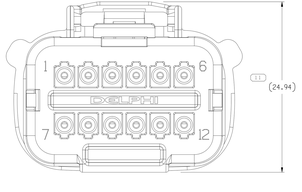

NOTES

1. UNLESS OTHERWISE SPECIFIED AND/OR INDICATED:

   DIMENSIONS ARE TO FACE OF VIEW SHOWN AND AUTOMATICALLY ROUNDED BY COMPUTER FOR INSPECTION (SEE MATH MODEL FOR PRECISE DIMENSIONS). FOR ALL OTHER DIMENSIONS NOT SHOWN BUT REQUIRED FOR TOOL BUILD, SEE MATH MODEL FOR PRECISE TOOL PATH DATA.

2. PART IS MANUFACTURED TO GEOMETRIC TOLERANCES. CENTERLINE DIMENSIONS ARE FOR REFERENCE ONLY.
3. SEALING CODE 4 - DESIGN WILL MEET REQUIREMENTS OF SAE/USCAR-2 CONNECTOR SYSTEM ENVIRONMENTAL TEST FLOWCHART (PRESSURE/VACUUM AND SUBMERSION).
4. THIS PRODUCT IS NOT CATEGORIZED AS AN APPEARANCE ITEM. MINOR IMPERFECTIONS (INCLUDING, BUT NOT LIMITED TO, FLOW MARKS, COLOR BLEMISHES, GATE VESTIGE, AND SOFT FLASH THAT DO NOT AFFECT THE FIT, FORM, OR FUNCTION OF THE PART ARE PERMISSIBLE PER EANP.4-3.CS.01_EN.
5. FOR APPLICATION DATA SEE THE INDIVIDUAL APPLICATION DRAWINGS.
6. ASSEMBLY TO BE USED WITH APPROPRIATE APTIV HOLDER DESIGN.
7. ASSEMBLY TO BE PROCESSED USING APTIV CONNECTION SYSTEMS BEST PRACTICE METHODS AND/OR CONNECTOR ASSEMBLY INSTRUCTIONS AND APPLICABLE REPAIR PROCEDURES.
8. BEFORE TERMINAL ASSEMBLY: VERIFY THAT PLR IS IN THE PRE-STAGE POSITION ON THE CONNECTOR. IF NOT: RETURN PLR TO PRE-STAGE POSITION.
9. FOR DIFFERENT PUNCH PATTERNS (IF AVAILABLE) SEE SHEET 2
10. FOR ASSEMBLIES WITH CPA SEE DRAWING 1551463Z

	1553214J	03	AC	106	1551461B	1551464D	1398865G	1552115G	1551463Z	F
	1553214Z	03	AC	105	1551461S	1551464D	1398865G	1552115G	1551463Z	E
	1553214J	03	AO	104	1551461J	1551464D	1398865G	1552115G	1551463Z	D
	1553214D	03	AC	103	1551461D	1551464D	1398865G	1552115G	1551463Z	C
	1553219J	03	AC	102	1551460B	1551464D	1398865G	1552115G	1551463Z	B
	1553213B	03	AC	101	1551460G	1551464D	1398865G	1552115G	1551463Z	A
	PART NO	REV	N/P	TYPE	CONNECTOR	PLR	SEAL CONN	SEAL CBL	RETAINER	USCAR

DRAWING NUMBER					
1553213 7					
SIZE	SCALE	FORMAT NO	SHEET NO	TOTAL SHT	REV	N/P
A1x3	5:1	2 OF 2	1 OF 2	R	09	-

DWG STATUS					ZONE	REVISION HISTORY	AUTH	DR	APVD	APVD
DATE	STS	REV	N/P	CHG						
30MY13	R	01	-	-	-	ALL PARTS - RELEASED PART DRAWING	422469	JTV	JTV	MKO
13APJ6	R	02	-	-	-	ALL PARTS - UPDATED CONN, PLR, SEAL CONN, SEAL CBL & RETAINER TO LATEST REVISION	432697	ABH	DGL	DGL M
09MY16	R	03	-	-	-	ALL PARTS - CORRECTED CBL SEAL 15521155 INSTEAD OF 15521155S	432974	ABH	DGL	DGL
21JL16	R	04	-	-	-	ALL PARTS - PSD WAS 10 AND ADDED DIM#12	433754	EVV	EVV	DGL
26OC16	R	05	-	-	-	ALL PARTS - RELOCATED DIM#12 AND DIM#10 WAS 1.75 ±0.15	434727	KYT	DAT	DAT
21FE17	R	06	-	-	-	15532139- UPDATED PART AVAILABILITY; ALL PARTS- ADDED ASSEMBLY REQUIREMENT NOTES	439803	NRM	DGL	DGL
19OC17	R	07	-	-	-	ALL PARTS - ADDED "SHT 1 OF 2"	438050	IMF	IMF	MJN
19JN19	R	08	-	-	-	ALL PARTS - ADDED "DIFFERENT PUNCH PATTERN CONFIGURATIONS" & "ASSEMBLIES WITH CPA" NOTES	443337	JLL	DSP	DSP
24JA24	R	09	-	-	-	15532141 - UPDATED PART AVAILABILITY (PN WAS NOT AVAILABLE)	563147	ESG	JAA	HGR

SYMBOL DEFINITION

A DIMENSION WITHOUT AN INSPECTION REPORT SYMBOL ( ) DOES NOT REQUIRE INSPECTION. IT MAY BE CONTROLLED ON THE INDIVIDUAL COMPONENT DRAWING.

TOTAL NO OF INSPECTIONS REQUIRED	16
LAST NO. USED	12

MISSING SYMBOLS

NO MISSING SYMBOL NUMBER

(12) PROCESS SENSITIVE DIMENSION

DIMENSIONS ENCLOSED IN ( ) INDICATE REFERENCE DIMENSIONS AND NO TOLERANCE WILL BE ESTABLISHED.

DIMENSIONAL RANGE (MM)									
FROM	0	6	30	120	315	1000	2000	4000	>4000
TO	6	30	120	315	1000	2000	4000	6000	
TOLERANCE (UNLESS OTHERWISE SPECIFIED)									
±0.15	±0.25	±0.4	±0.6	±0.8	±1.0	±1.2	±1.6		

ANGULAR TOLERANCE ±2°

ALL DIMENSIONS ARE IN MILLIMETERS

REFERENCE

THIRD ANGLE PROJECTION

DO NOT SCALE

USE MATH DATA

NX

THIS DRAWING IS THE PROPERTY OF APTIV AND CONTAINS APTIV CONFIDENTIAL INFORMATION. THE RECEIPT OR POSSESSION OF THIS DOCUMENT AND UTILIZATION OF THIS DOCUMENT OR ITS RELATED CAD MATH DATA, NO WILL BE COMMUNICATION OF ANY CONTENT TO OTHERS, WITHOUT EXPRESS AUTHORIZATION, IS PROHIBITED.

COPYRIGHT 2013 APTIV. ALL RIGHTS RESERVED.

(*) LINE DRAWN THROUGH A PART NUMBER INDICATES THAT PHYSICAL PARTS ARE NOT AVAILABLE FOR ORDERING.

PART NUMBERS THAT DO NOT HAVE A LINE PRESENT INDICATE THAT PHYSICAL PARTS WILL BE AVAILABLE FOR ORDERING.

CONTACT APTIV SALES TO ASSURE AVAILABILITY OF PARTS.

DWG TYPE	PART DRAWING
STATE	
VOLUME (CM³)	SYSTEM CODE

UNLESS OTHERWISE SPECIFIED

THIS DOCUMENT IS IN ACCORDANCE WITH ASME Y14.5M-1994 UNLESS OTHERWISE SPECIFIED. DIMENSIONS AND TOLERANCING MAXIMUM COST. SEPARATE PATTERNS OF FEATURES MAY BE GRADE SEPARATELY REGARDLESS OF DATUM REFERENCES.

DR	JOSE LUIS TAPIA	30MY13
APVD	JOSE LUIS TAPIA	30MY13
APVD	ALICIA GUERRERO	31MY13
APVD		
APVD		

SUBSTANCES OF CONCERN AND RECYCLED CONTENT PER APTIV (DRAWING)

TITLE	SEE CHART
DRAWING NAME	TAXI ASM CONN 12 F OCS 1.5 SLD
DRAWING NUMBER	1553213 7

SIZE	SCALE	FORMAT NO	SHEET NO	TOTAL SHT	REV	N/P
A1x3	5:1	1 OF 2	1 OF 2	R	09	-

•APTIV•
CONNECTION SYSTEMS
WARREN, OH

Plot Date: 2024-Jan-24 Time: 10:01:19
Plot By: ALICIA GUERRERO
Plot Scale: 1.000000
Plot Size: A1x3
Plot Rotation: 0.00
Plot Offset: 0.00,0.00
Plot Device: PDF-XCHANGE