SYMBOL DEFINITION		
A DIMENSION WITHOUT AN INSPECTION REPORT SYMBOL ( ) DOES NOT REQUIRE INSPECTION. IT MAY BE CONTROLLED ON THE INDIVIDUAL COMPONENT DRAWING.	TOTAL NO OF INSPECTIONS REQUIRED	22
	LAST NO. USED	22

MISSING SYMBOLS
NO MISSING SYMBOL NUMBER

DWG STATUS DATE	STG	REV	N/P	CHG	ZONE	REVISION HISTORY	AUTH	DR	APVD 1	APVD 2
28JA16	R	02	-	-		RELEASED PART DRAWING	431968	AHG	KRM	KRM
02AP24	R	03	-	-		ALL PARTS - ADDED ALTERNATIVE MAT'L ON CHART AND NOTE	561907	AHY	AHY	YGR

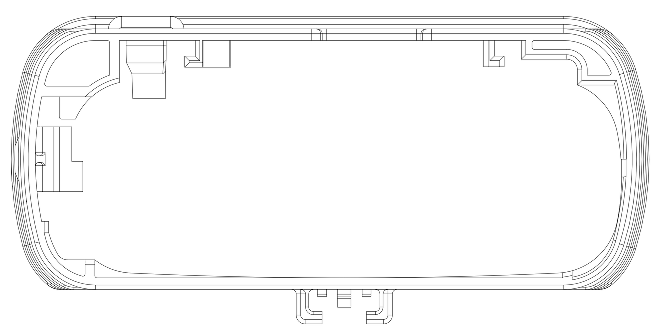

TYPE 102
SAME AS TYPE 101
EXCEPT AS SHOWN

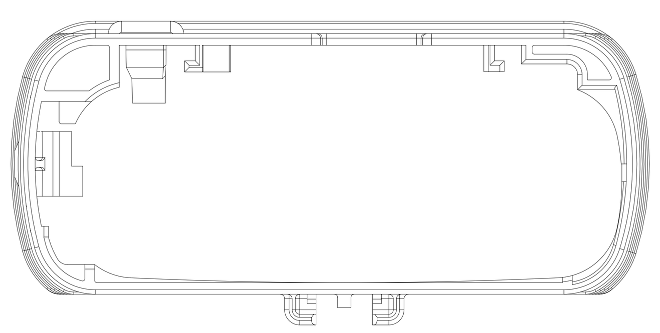

TYPE 103
SAME AS TYPE 101
EXCEPT AS SHOWN

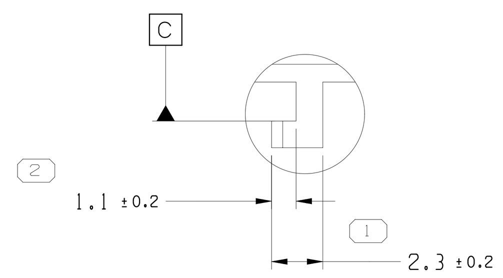

DETAIL B
SCALE 5:1

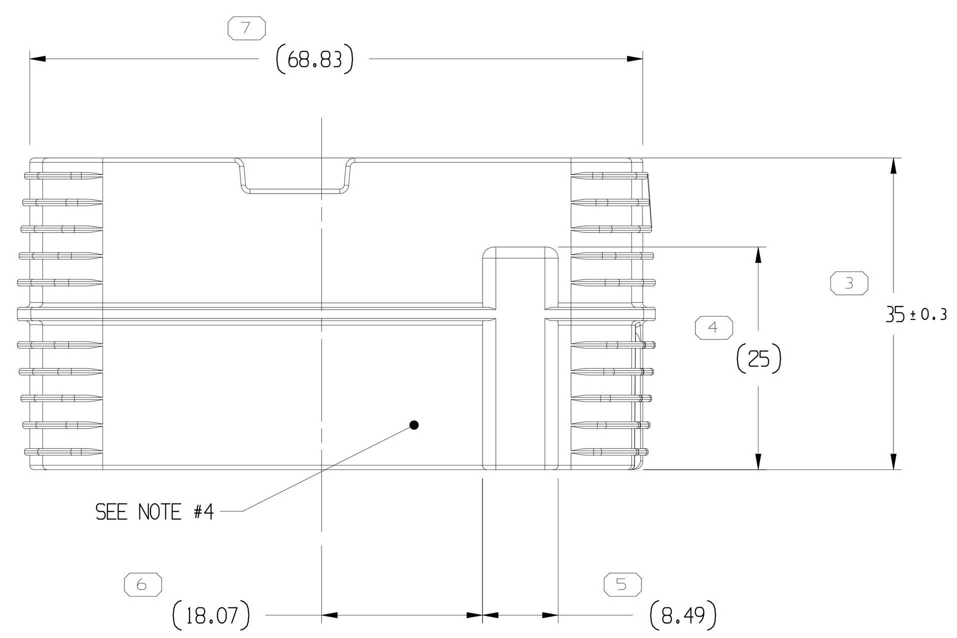

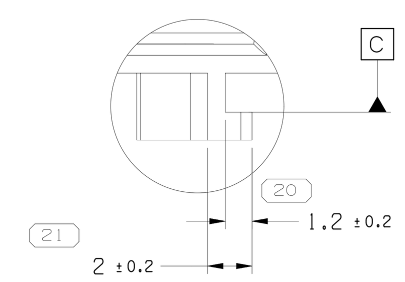

DETAIL C
SCALE 5:1

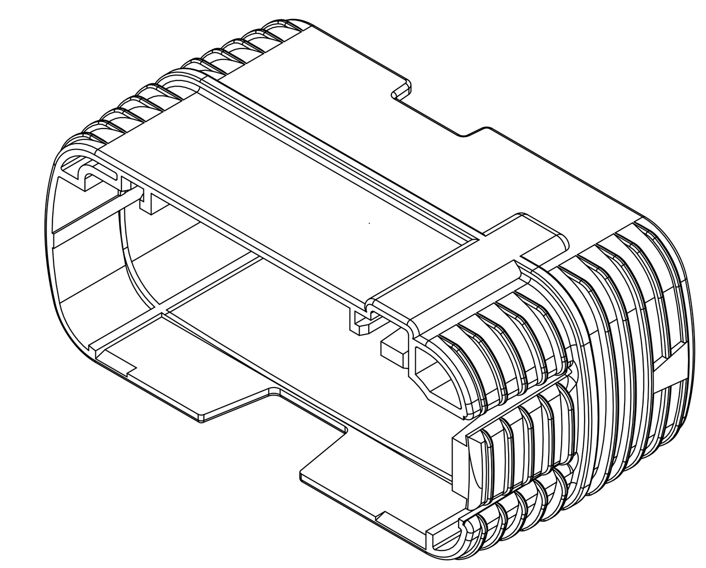

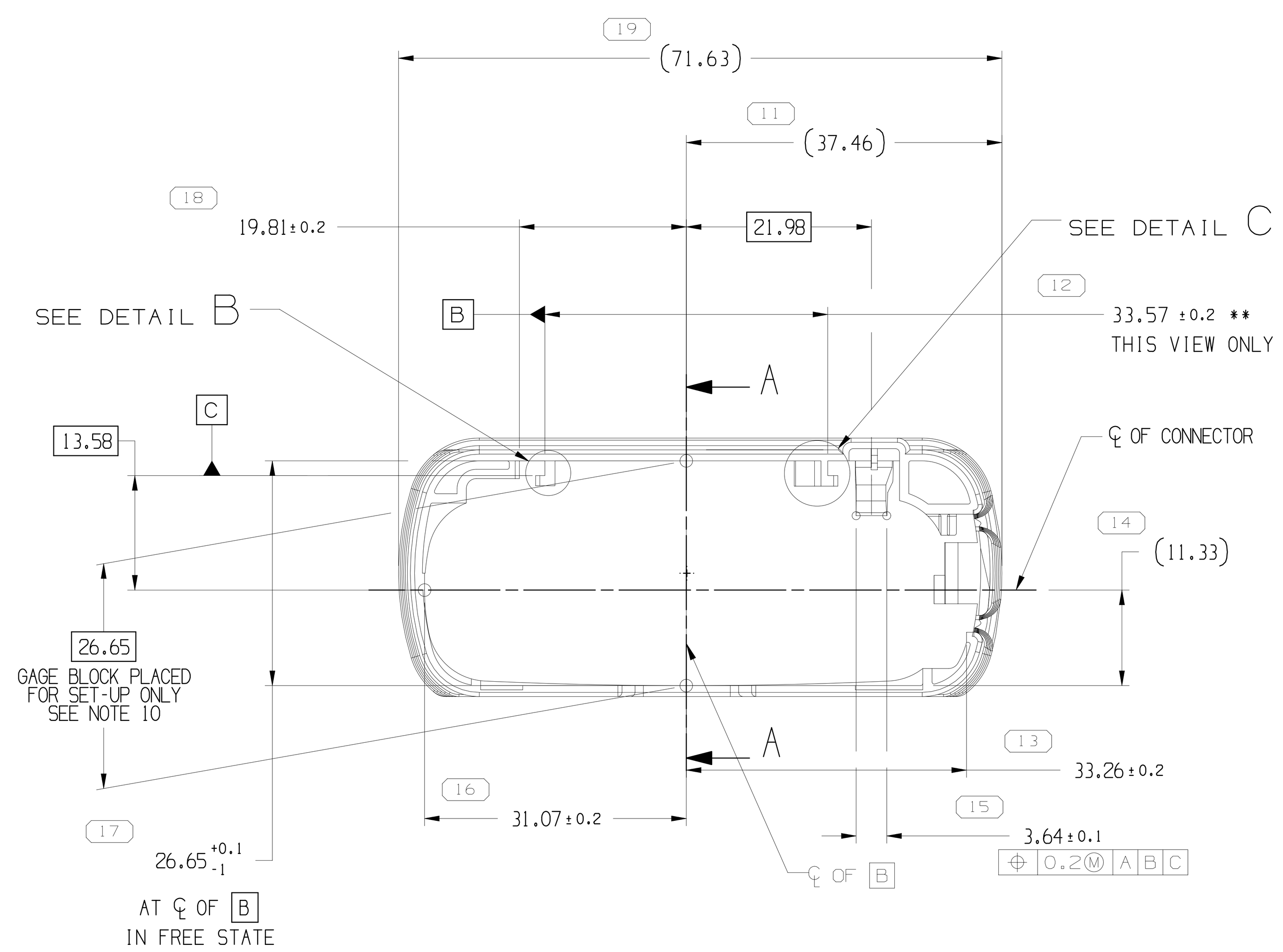

TYPE 101

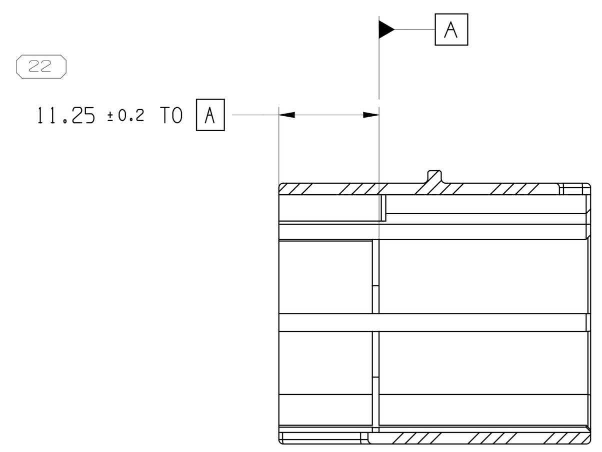

SECTION A-A

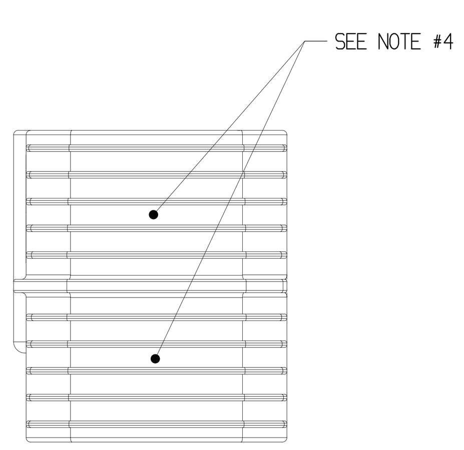

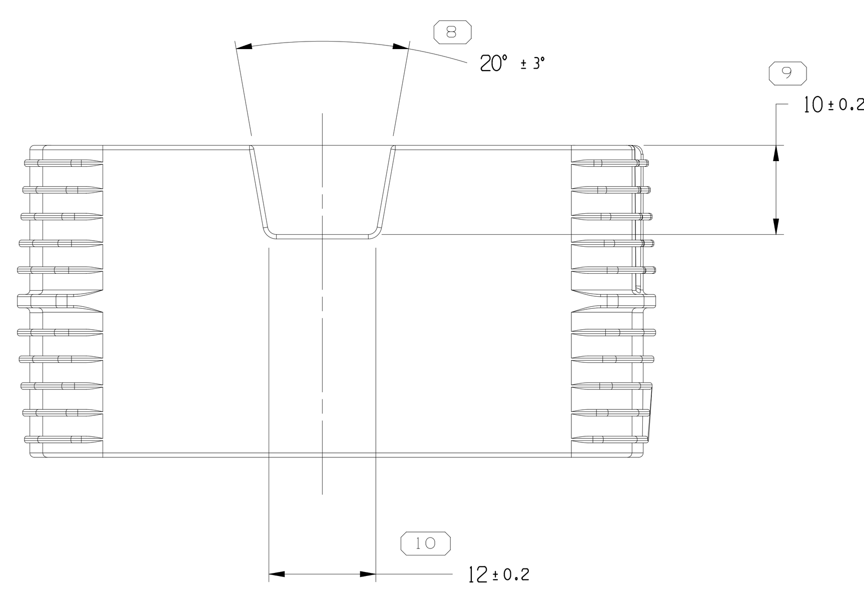

NOTES

1. UNLESS OTHERWISE SPECIFIED AND/OR INDICATED:

   DIMENSIONS ARE TO FACE OF VIEW SHOWN AND AUTOMATICALLY ROUNDED BY COMPUTER FOR INSPECTION (SEE MATH MODEL FOR PRECISE DIMENSIONS). FOR ALL OTHER DIMENSIONS NOT SHOWN BUT REQUIRED FOR TOOL BUILD, SEE MATH MODEL FOR PRECISE TOOL PATH DATA.

2. THIS PRODUCT IS NOT CATEGORIZED AS AN APPEARANCE ITEM, MINOR IMPERFECTIONS INCLUDING, BUT NOT LIMITED TO, FLOW MARKS, COLOR BLEMISHES, GATE VESTIGE, AND SOFT FLASH THAT DO NOT AFFECT THE FIT, FORM, OR FUNCTION OF THE PART ARE PERMISSIBLE PER EANP_4-3_CS_01_EN.

3. MATERIAL RECYCLING CODE PER ISO 11469. (1)X(0.3) CHARACTERS AS SHOWN TO BE LOCATED ON ANY EXTERIOR SURFACE.

4. CORPORATE BRAND TO BE APPLIED TO PRODUCT DESIGN PER THE LATEST REVISION OF ESD S1085201.

5. (R0.25 MAX) PERMISSIBLE ON CORNERS & FILLETS SHOWN AS SHARP

6. PART TO BE MOLDED FREE FROM FLASH,VOIDS,STRESSES, IMPERFECTIONS, AND TOOL MARKS, THAT AFFECT FUNCTION, OR HANDLING OF THE PART

7. MATERIAL: BASF ULTRAMID,NYLON6/6 A3EG7 (PA66 GF35) REGRIND 25% MAX

8. ITEMS INDICATED WITH ** WILL NOT BE DEVIATED

9. ALL FEATURES INDICATED WITH REFERENCE DIMENSIONS MUST BE PRESENT

10. APPLICABLE DIMENSIONS TO BE MEASURED WITH GAGE BLOCK AS SPECIFIED

11. VENDOR TO SUBMIT FOR ENGINEERING APPROVAL, LOCATION AND TYPES OF PULLER RINGS,GATING,PARTING LINES AND EJECTOR MARKS PRIOR TO CONSTRUCTION OF TOOLING

12. ALL EJECTOR MARKS TO BE FLUSH TO (0.25mm) BELOW THE SURFACE OF THE PART

13. ALTERNATIVE MATERIAL WAS IMPLEMENTED AS A MEASURE AGAINST SHORTAGE OF THE MAIN MATERIAL; CHANGE APPROVED BY OEM AND COMMUNICATED IN PTR 308.

PART NO. (MVL)	PCL	PART NO. (APTIV)	REV	N/P	MATERIAL SPECIFICATION	ALTERNATIVE MAT'L	TYPE	VOL (MM³)
F770000	A	33504671	01	AB	POLYAMIDE COMPOUND GRAY	POLYESTER COMPOUND GRAY	101	10700.079
F870000	A	33512119	01	AB	POLYAMIDE COMPOUND GRAY	POLYESTER COMPOUND GRAY	102	11261.985
F970000	A	33512120	01	AB	POLYAMIDE COMPOUND GRAY	POLYESTER COMPOUND GRAY	103	11164.029

PART NUMBER CHART

DIMENSIONAL RANGE (MM)									CHART E1
FROM TO	>0 20	>20 30	>30 70	>70 100	>100 150	>150 200	>200 250	>250 300	>300 400
TOLERANCE UNLESS OTHERWISE SPECIFIED	±0.15	±0.2	±0.3	±0.4	±0.5	±0.6	±0.8	±1	±1.2

ANGULAR TOLERANCE ±2°

(3) PROCESS SENSITIVE DIMENSION

DIMENSIONS ENCLOSED IN ( ) INDICATE REFERENCE DIMENSIONS AND NO TOLERANCE LIMITS ARE ESTABLISHED

A LINE DRAWN THROUGH A PART NUMBER INDICATES THAT PHYSICAL PARTS ARE NOT AVAILABLE FOR ORDERING.

PART NUMBERS THAT DO NOT HAVE A LINE PRESENT INDICATE THAT PHYSICAL PARTS ARE AVAILABLE FOR ORDERING.

CONTACT APTIV SALES TO ASSURE AVAILABILITY OF PARTS.

DWG TYPE: PART DRAWING

STYLE

VOLUME (CM³)

DISTR CODE: D

UNLESS OTHERWISE SPECIFIED

THIS DOCUMENT IS IN ACCORDANCE WITH ASME Y14.5M-1994 AS AMENDED BY THE GM GLOBAL DIMENSIONING AND TOLERANCING ADDENDUM-2001. SEPARATE PATTERNS OF FEATURES MAY BE GAGED SEPARATELY REGARDLESS OF DATUM REFERENCES.

ALL DIMENSIONS ARE IN MILLIMETERS

REFERENCE: MVL DWG - PC10504284

THIRD ANGLE PROJECTION

DO NOT SCALE

USE MATH DATA

CAD NX

•APTIV•

CONNECTION SYSTEMS
WARREN, OH
COPYRIGHT 2016 APTIV. ALL RIGHTS RESERVED.

THIS DRAWING IS THE PROPERTY OF APTIV AND CONTAINS APTIV CONFIDENTIAL INFORMATION. THE REPRODUCTION, DISTRIBUTION AND UTILIZATION OF THIS DOCUMENT OR ITS RELATED CAD MATH DATA, AS WELL AS COMMUNICATION OF ANY CONTENT TO OTHERS, WITHOUT EXPRESS AUTHORIZATION, IS PROHIBITED.

		DATE
DR		
APVD1	ARMANDO HERNANDEZ	28JA16
APVD2	KARINA RAMIREZ	28JA16
APVD3	KARINA RAMIREZ	28JA16
APVD4		
APVD5		

SUBSTANCES OF CONCERN AND RECYCLED CONTENT PER APTIV 10949001

MATERIAL: SEE CHART

DRAWING NAME: TAXI LOCK CONN LK SHROUD

DRAWING NUMBER: 33517227

SIZE	SCALE	FRAME NO	SHEET NO	STG	REV	N/P
A0	2:1	1 OF 1	1 OF 1	R	03	-

User: GZWXM1 Date: 27-May-24 Time: 10:41:17
Part: 33517227-CUS01-S01/03
GZWXM1,05272024,16:39,75pass,nor