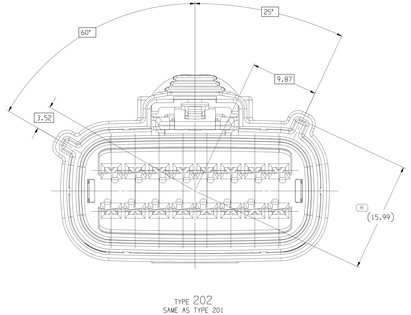

TYPE 202
SAME AS TYPE 201
EXCEPT AS SHOWN

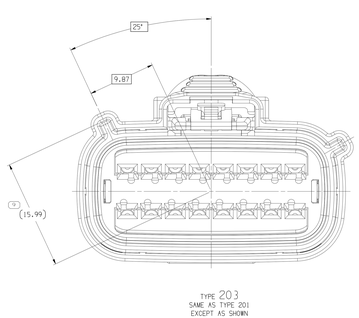

TYPE 203
SAME AS TYPE 201
EXCEPT AS SHOWN

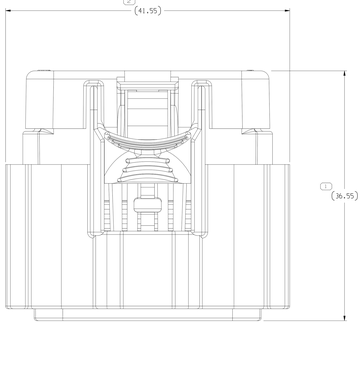

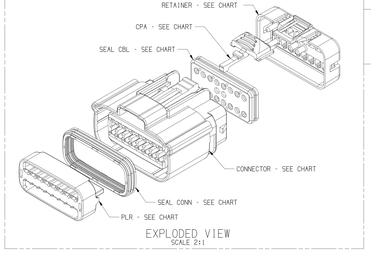

EXPLODED VIEW
SCALE 2:1

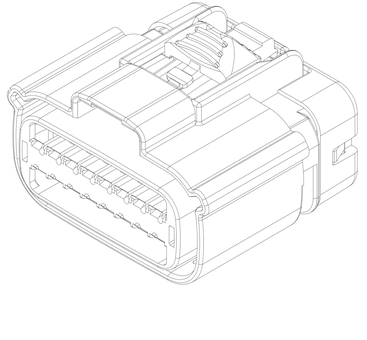

SYMBOL DEFINITION		
A DIMENSION WITHOUT AN INSPECTION REPORT SYMBOL ( ) DOES NOT REQUIRE INSPECTION., IT MAY BE CONTROLLED ON THE INDIVIDUAL COMPONENT DRAWING.	TOTAL NO OF INSPECTIONS REQUIRED	11
	LAST NO. USED	9

MISSING SYMBOLS
NO MISSING SYMBOLER

DWG STATUS					ZONE	REVISION HISTORY	AUTH	DR	APVD	APVD
DATE	SIZE	REV	N/P	CHG						
08SE14	R	01	-	-	-	ALL PARTS - WERE ON SHT 01	427366	KYT	KYT	RGC
23SE15	R	02	-	-	-	ALL PARTS - RELOCATED DIM #7 AND REMOVED BACK VIEW; 33157812 - WAS TYPE 2021 33157813 - WAS TYPE 2031; 33157814 - WAS TYPE 2041; 33204459 - RELEASED	430830	CGD	CGD	VMM
10MY16	R	03	-	-	-	33350494-99 & 33350500-03 - RELEASED	432944	LMF	LMF	JJE
31MY16	R	04	-	-	-	33350494-99 & 33350500-03 - MOVED TO DRAWING 15532154 SHT02	433218	GLO	GLO	JJE
12AU16	R	05	-	-	-	ALL PARTS - PSD WAS #5, DIM #6 WAS 6.97, REVISED CPA LABEL AND UPDATED PLR TO LATEST REVISION	433263	RRM	DGL	DGL
03OC16	R	06	-	-	-	UPDATED CAVITIES CONFIGURATION CHART; 33389642-43 - RELEASED	434251	JTV	JTV	JJE
13OC16	R	07	-	-	-	35014681 - RELEASED	434573	DCH	DCH	JJE
02NO16	R	08	-	-	-	35018894-35018917, 35018962, 35019541, 42, 45, 47, 49, 51, 53, 55, 57, 59, 61, 63, 65, 67 & 35019569 - RELEASED	434714	AGC	AGC	JJE
25AP17	R	09	-	-	-	ALL PARTS - ADDED ASSEMBLY NOTES, REMOVED BACK FACE ITEM NOTE AND UPDATED NON APPEARANCE ITEM NOTE.	436383	DAD	DAD	DGL
06SE17	R	10	-	-	-	35157527 & 35127778-83 - RELEASED	437568	GLO	GLO	JJE
08JA18	R	11	-	-	-	35151164 - RELEASED	438404	ESC	ESC	ACV
06FE18	R	12	-	-	-	35151164 - UPDATED PDM ATTRIBUTES	438951	ACV	DGL	ACV
02AP18	R	13	-	-	-	35197075-81 - RELEASED; 35127778-83, 33204459 - (15.99) WAS 2X (15.99)	439379	AHD	AHD	JJE
18AP18	R	14	-	-	-	35201615 - RELEASED 35018894,95,98,99,3501901,02,03, 35018913,14,17 - UPDATED PART AVAILABILITY	439561	AHD	AHD	JJE
11MY18	R	15	-	-	-	35205170 - RELEASED	439615	LVG	JAA	HV
11MR19	R	16	-	-	-	35127778-81 & 35205170 - UPDATED PART AVAILABILITY	442601	JCA	RED	JCA
25JN19	R	17	-	-	-	ALL PARTS - ADDED "OPEN CAVITY VERSIONS" & "ASSEMBLIES WITH CPA" NOTES	443339	ALL	DSP	DSP
13SE19	R	18	-	-	-	35394439 - RELEASED	444518	DAV	EVV	AGH
10SE20	R	19	-	-	-	35394439 - UPDATED PART AVAILABILITY	552434	JLL	JAA	AGH
26OC20	R	20	-	-	-	35502371, 35502379, 35502386 - RELEASED	552747	JLL	JAA	SV
2NF21	R	21	-	-	-	35534755 - RELEASED	553581	JDC	JAA	SV
23AP21	R	22	-	-	-	35151164 - UPDATED PART AVAILABILITY (PN WAS NOT AVAILABLE)	554157	DRA	JAA	SV

PART NO	REV	N/P	TYPE	CONNECTOR	PLR	SEAL CONN	SEAL CBL	RETAINER	CPA	USCAR OPTION	PLUGGED BLOCKED CIRCUITS POSITIONS 1	2	3	4	5	6	7	8	9	10	11	12	13	14	15	16	TOTAL BLOCKED CAVITIES
35534755	01	-	201	15514462	15514487	17968706	15514486	35534748	15519096	A												X					1
35502482	01	-	201	15514462	15514487	17968706	15514486	35502384	15519096	A		X	X	X	X	X	X			X			X	X	X	X	X	14
35502429	01	-	201	15514462	15514487	17968706	15514486	35502375	15519096	A												X	X	X			4
35502421	01	-	201	15514462	15514487	17968706	15514486	35502366	15519096	A		X	X							X			X	X	X	X	X	8
35394439	01	AA	201	15514462	15514487	17968706	15514486	35394438	15519096	A				X									X	X	X			3
35205170	01	AB	201	15514462	15514487	17968706	15514486	35205199	15519096	A														X	X	X	3
35201615	01	AA	201	15514462	15514487	17968706	15514486	35201612	15519096	A		X	X		X	X	X				X				X			7
35197081	01	AA	203	15514465	15514487	17968706	15514486	35197066	15519096	C		X	X					X	X					X	X	X	X	8
35197080	01	AA	203	15514465	15514487	17968706	15514486	35197065	15519096	C		X	X					X	X	X	X	X	X	X	X	X	X	12
35197079	01	AA	203	15514465	15514487	17968706	15514486	35197064	15519096	C			X					X	X	X	X	X	X	X	X	X	X	11
35197078	01	AA	203	15514465	15514487	17968706	15514486	35197063	15519096	C			X					X	X					X	X	X	X	7
35197077	01	AA	203	15514465	15514487	17968706	15514486	35197062	15519096	C			X	X	X		X	X	X					X	X	X	X	10
35197076	01	AA	203	15514465	15514487	17968706	15514486	35197061	15519096	C			X				X	X	X					X	X	X	X	8
35197075	01	AA	203	15514465	15514487	17968706	15514486	35197060	15519096	C			X				X	X	X	X	X	X	X	X	X	X	X	12
35151164	01	AC	201	15514462	15514487	17968706	15514486	15514482	15519096	A	X	X	X	X	X	X	X	X	X	X	X	X	X	X	X	X	X	16
35127681	01	AB	202	15514463	15514487	17968706	15514486	35123809	15519096	B	X	X	X	X			X						X	X	X	X		9
35127682	01	AB	202	15514463	15514487	17968706	15514486	35123808	15519096	B													X	X	X	X	4
35123781	01	AC	202	15514463	15514487	17968706	15514486	35123806	15519096	B					X								X	X	X	X	5
35123780	01	AC	202	15514463	15514487	17968706	15514486	35123805	15519096	B	X	X	X	X		X	X						X	X	X	X	10
35123779	01	AC	202	15514463	15514487	17968706	15514486	35123804	15519096	B					X								X	X	X	X	5
35123778	01	AC	202	15514463	15514487	17968706	15514486	35123802	15519096	B	X	X	X	X	X		X						X	X	X	X	10
35157527	01	AA	201	15514462	15514487	17968706	15514486	35157526	15519096	A	X	X	X	X	X	X	X					X	X			X	10
35019569	01	AB	201	15514462	15514487	17968706	15514486	35019579	15519096	A							X	X	X	X	X	X	X	X	X	X	9
35019562	01	AB	201	15514462	15514487	17968706	15514486	35019538	15519096	A	X															X	2
35019565	01	AB	201	15514462	15514487	17968706	15514486	35019537	15519096	A	X	X	X	X			X		X	X	X	X				X	10
35019563	01	AB	201	15514462	15514487	17968706	15514486	35019536	15519096	A								X		X							3
35019561	01	AB	201	15514462	15514487	17968706	15514486	35019535	15519096	A	X	X	X	X	X	X	X		X		X						11
35019559	01	AB	201	15514462	15514487	17968706	15514486	35019534	15519096	A	X	X	X	X	X	X	X		X		X				X	X	11
35019557	01	AB	201	15514462	15514487	17968706	15514486	35019533	15519096	A		X					X		X						X	X	5
35019555	01	AB	201	15514462	15514487	17968706	15514486	35019532	15519096	A	X	X	X	X	X	X	X		X		X						9
35019553	01	AB	201	15514462	15514487	17968706	15514486	35019531	15519096	A		X					X		X							X	3
35019551	01	AB	201	15514462	15514487	17968706	15514486	35019530	15519096	A						X				X	X	X	X	X	X	X	9
35019549	01	AB	201	15514462	15514487	17968706	15514486	35019529	15519096	A	X	X	X	X	X	X							X	X	X			8
35019547	01	AB	201	15514462	15514487	17968706	15514486	35019528	15519096	A	X	X	X	X	X	X						X	X	X	X			11
35019545	01	AB	201	15514462	15514487	17968706	15514486	35019527	15519096	A						X						X	X	X	X			6
35019543	01	AB	201	15514462	15514487	17968706	15514486	35019526	15519096	A					X			X		X		X		X		X	6
35019541	01	AB	201	15514462	15514487	17968706	15514486	35019525	15519096	A	X	X	X	X	X	X			X		X	X	X	X	X	X	X	14
35019862	01	AB	201	15514462	15514487	17968706	15514486	35019524	15519096	A	X	X	X	X	X	X					X		X	X	X	X	X	11
35018917	01	AC	201	15514462	15514487	17968706	15514486	33377709	15519096	A							X	X	X	X	X	X	X	X		X	9
35019416	01	AC	201	15514462	15514487	17968706	15514486	33374895	15519096	A																X	1
35019415	01	AB	201	15514462	15514487	17968706	15514486	33374894	15519096	A											X						1
35018914	01	AC	201	15514462	15514487	17968706	15514486	33374893	15519096	A													X	X		X	3
35018913	01	AC	201	15514462	15514487	17968706	15514486	33374892	15519096	A																X	1
35018912	01	AB	201	15514462	15514487	17968706	15514486	33368227	15519096	A											X			X			2
35018911	01	AB	201	15514462	15514487	17968706	15514486	33368226	15519096	A											X	X	X	X			4
35018910	01	AB	201	15514462	15514487	17968706	15514486	33368225	15519096	A	X	X	X	X	X	X	X			X		X	X		X	X	12
35018909	01	AB	201	15514462	15514487	17968706	15514486	33368224	15519096	A		X		X		X	X			X		X	X		X	X	9
35018908	01	AB	201	15514462	15514487	17968706	15514486	33368223	15519096	A					X			X		X	X	X		X			5
35018907	01	AB	201	15514462	15514487	17968706	15514486	33368222	15519096	A				X		X			X		X		X	X			7
35018906	01	AB	201	15514462	15514487	17968706	15514486	33368221	15519096	A					X		X		X	X	X	X	X	X			9
35018905	01	AB	201	15514462	15514487	17968706	15514486	33368220	15519096	A					X			X		X	X						4
35018904	01	AB	201	15514462	15514487	17968706	15514486	33368219	15519096	A			X	X	X			X		X	X	X	X	X			10
35018903	01	AC	201	15514462	15514487	17968706	15514486	33368218	15519096	A						X	X	X	X	X	X	X	X	X			10
35018902	01	AC	201	15514462	15514487	17968706	15514486	33350489	15519096	A			X									X	X				4
35018901	01	AC	201	15514462	15514487	17968706	15514486	33350488	15519096	A			X			X											2
35018900	01	AB	201	15514462	15514487	17968706	15514486	33350487	15519096	A	X						X							X			5
35018899	01	AC	201	15514462	15514487	17968706	15514486	33350486	15519096	A			X												X	X	3
35018898	01	AC	201	15514462	15514487	17968706	15514486	33350485	15519096	A			X				X	X	X	X	X	X	X	X	X	X	11
35018897	01	AB	201	15514462	15514487	17968706	15514486	33350484	15519096	A	X					X				X							7
35018896	01	AB	201	15514462	15514487	17968706	15514486	33350483	15519096	A		X						X		X		X			X		5
35018895	01	AC	201	15514462	15514487	17968706	15514486	33350480	15519096	A			X					X	X	X	X	X	X	X			9
35018894	01	AC	201	15514462	15514487	17968706	15514486	33350479	15519096	A			X														1
35014681	01	AB	201	15514462	15514487	17968706	15514486	35014676	15519096	A							X									X	2
33389043	01	AB	201	15514462	15514487	17968706	15514486	33389068	15519096	A							X	X			X		X				4
33389042	01	AB	201	15514462	15514487	17968706	15514486	33389067	15519096	A	X							X	X								3
33296469	01	AF	202	15514463	15514487	17968706	15514486	33289416	15519096	B		X		X			X		X			X		X	X	X	9
33157814	01	AE	201	15514462	15514487	17968706	15514486	33157810	15519096	A						X	X	X	X							X	5
33157813	01	AE	201	15514462	15514487	17968706	15514486	33157809	15519096	A								X	X	X	X	X	X	X	X	X	8
33157812	01	AE	201	15514462	15514487	17968706	15514486	33157808	15519096	A					X	X	X	X	X		X	X	X	X	X	X	10
33157811	01	AE	201	15514462	15514487	17968706	15514486	33157807	15519096	A									X	X						X	3

PART NO	REV	N/P	TYPE	CONNECTOR	PLR	SEAL CONN	SEAL CBL	RETAINER	CPA	USCAR OPTION	PLUGGED BLOCKED CIRCUITS POSITIONS 1	2	3	4	5	6	7	8	9	10	11	12	13	14	15	16	TOTAL BLOCKED CAVITIES

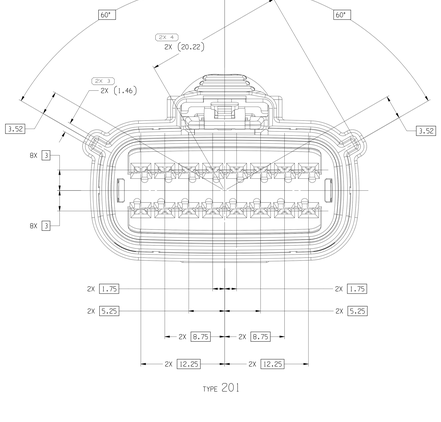

TYPE 201

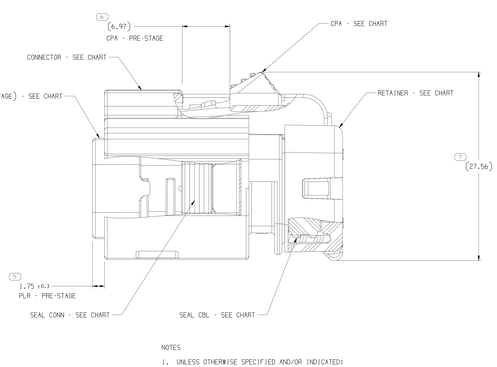

NOTES

1. UNLESS OTHERWISE SPECIFIED AND/OR INDICATED:

   DIMENSIONS ARE TO FACE OF VIEW SHOWN AND AUTOMATICALLY ROUNDED BY COMPUTER FOR INSPECTION (SEE MATH MODEL FOR PRECISE DIMENSIONS). FOR ALL OTHER DIMENSIONS NOT SHOWN BUT REQUIRED FOR TOOL BUILD, SEE MATH MODEL FOR PRECISE TOOL PATH DATA.

2. PART IS MANUFACTURED TO GEOMETRIC TOLERANCES. CENTERLINE DIMENSIONS ARE FOR REFERENCE ONLY.

3. SEALING CODE 4 - DESIGN WILL MEET REQUIREMENTS OF SAE/USCAR-2 CONNECTOR SYSTEM ENVIRONMENTAL TEST FLOWCHART (PRESSURE/VACUUM AND SUBMERSION).

4. THIS PRODUCT IS NOT CATEGORIZED AS AN APPEARANCE ITEM. MINOR IMPERFECTIONS INCLUDING, BUT NOT LIMITED TO, FLOW MARKS, COLOR BLEMISHES, GATE VESTIGE, AND SOFT FLASH THAT DO NOT AFFECT THE FIT, FORM, OR FUNCTION OF THE PART ARE PERMISSIBLE PER EANP_4-3_CS_01_EN.

5. FOR APPLICATION DATA SEE THE INDIVIDUAL APPLICATION DRAWINGS.

6. ASSEMBLY TO BE USED WITH APPROPRIATE APTIV HOLDER DESIGN.

7. ASSEMBLY TO BE PROCESSED USING APTIV CONNECTION SYSTEMS BEST PRACTICE METHODS AND/OR CONNECTOR ASSEMBLY INSTRUCTIONS AND APPLICABLE REPAIR PROCEDURES.

8. BEFORE TERMINAL ASSEMBLY; VERIFY THAT PLR IS IN THE PRE-STAGE POSITION ON THE CONNECTOR., IF NOT, RETURN PLR TO PRE-STAGE POSITION.

9. FOR ALL OPEN CAVITY VERSIONS SEE SHEET 1

10. FOR ASSEMBLIES WITHOUT CPA SEE DRAWING 15532154

DRAWING NO.	15514480						
SIZE	SCALE	FRAME NO	SHEET NO	TOTAL SHTS	REV	NCN
A1x3	5:1	1 OF 2	2 OF	2	R	22	-

(6) PROCESS SENSITIVE DIMENSION	REFERENCE
DIMENSIONS ENCLOSED IN ( ) INDICATE REFERENCE DIMENSIONS AND NO TOLERANCE UNLESS OTHERWISE SPECIFIED	

DIMENSIONAL RANGE (MM)							
OVER	0.5	3	6	30	120	400	1000
TO	3	6	30	120	400	1000	2000
TOLERANCE UNLESS OTHERWISE SPECIFIED	±0.25	±0.30	±0.40	±0.50	±0.80	±1.20	±2.00

DIMENSIONAL RANGE (MM)						
OVER	2000	3000	4000	5000	6000	7000
TO	3000	4000	5000	6000	7000	8000
TOLERANCE UNLESS OTHERWISE SPECIFIED	±3.00	±4.00	±5.00	±6.00	±7.00	±8.00

THIRD ANGLE PROJECTION

DO NOT SCALE
USE MATH DATA

NX

A "-----" LINE DRAWN THROUGH A PART NUMBER INDICATES THAT PHYSICAL PARTS ARE NOT AVAILABLE FOR ORDERING. PART NUMBERS THAT DO NOT HAVE A LINE PRESENT INDICATE PARTS ARE AVAILABLE FOR ORDERING. CONTACT APTIV SALES TO ASSURE AVAILABILITY OF PARTS.	
DWG TYPE	PART DRAWING
VOLUME (CM³)	SYSTEM UNIT
UNLESS OTHERWISE SPECIFIED THIS DOCUMENT IS IN ACCORDANCE WITH ASME Y14.5M-1994 DIMENSIONING AND TOLERANCING. TOLERANCING PRINCIPLE: ISO 8015. THE PATTERNING OF FEATURES MAY BE SHOWN SEPARATELY REGARDLESS OF DATUM REFERENCES.	
ALL DIMENSIONS ARE IN MILLIMETERS	

MATERIAL	
APVD1	YAMIR TELLEZ
APVD2	YAMIR TELLEZ
APVD3	RAMIRO GONZALEZ
APVD4	
APVD5	
SPEC	SUBSTANCES OF CONCERN AND RECYCLED CONTENT PER APTIV STANDARDS
FINISH	SEE CHART
DRAWN BY NAME	TAXI ASM CONN 16 F OCS 1.5 SLD

DRAWING NUMBER	15514480						
SIZE	SCALE	FRAME NO	SHEET NO	TOTAL SHTS	REV	NCN
A1x3	5:1	1 OF 2	2 OF	2	R	22	-

•APTIV•
CONNECTION SYSTEMS
WARREN, OH
COPYRIGHT 2014 APTIV. ALL RIGHTS RESERVED.
THIS DRAWING IS THE PROPERTY OF APTIV AND CONTAINS APTIV CONFIDENTIAL INFORMATION. NEITHER THIS DRAWING NOR THE INFORMATION ON IT MAY BE USED FOR THE MANUFACTURE OR SALE OF ANY ITEM WITHOUT THE WRITTEN CONSENT OF APTIV. BY ACCEPTANCE OF THIS DOCUMENT OR ITS RELATED ITEM, DATA, OR WRITTEN COMMUNICATION OF ANY CONTENT TO OTHERS, YOU AGREE TO KEEP THE INFORMATION CONFIDENTIAL AND NOT USE IT WITHOUT APTIV'S PRIOR WRITTEN CONSENT.

Plotted: 23-MAR-21 11:44 | Saved: 23-MAR-21 11:44 | By: YTELLEZ | Path: C:\Users\ytellez\Documents\Creo Projects\15514480\15514480_A.drw | Size: 1.5MB