SUITABLE TERMINALS					BLIND PLUG
TERMINAL SIZE	TERMINAL TYPE	PART NUMBER	WIRE SIZE (MM²)	PLATING	
0.5	4X FEMALE TERMINAL CTS 0.5 MM	33367567	0.08 - 0.14	Sn	35790629
		33367568	0.17 - 0.35		
		33389499	0.08 - 0.14	Ag	
		33389500	0.17 - 0.35		

SYMBOL DEFINITION		
A DIMENSION WITHOUT AN INSPECTION REPORT SYMBOL (▭) DOES NOT REQUIRE INSPECTION. IT MAY BE CONTROLLED ON THE INDIVIDUAL COMPONENT DRAWING.	TOTAL NO OF INSPECTIONS REQUIRED	15
	LAST NO. USED	15

MISSING SYMBOLS
NO MISSING SYMBOL NUMBER

DWG STATUS					ZONE	REVISION HISTORY	AUTH	DR	APVD 1	APVD 2
DATE	STG	REV	N/P	CHG						
16JN23	U	01	-			CREATED CUSTOMER PART DRAWING	449510	LHQ	LW	JZ

TPA IN FINAL POSITION & CPA IN PRE-POSITION

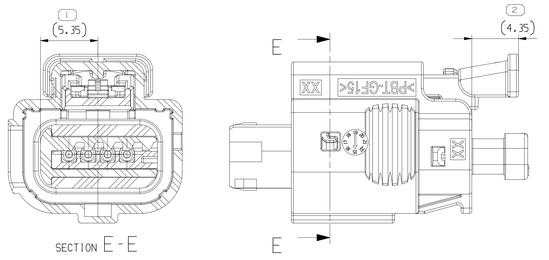

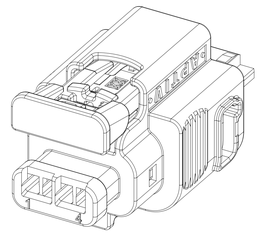

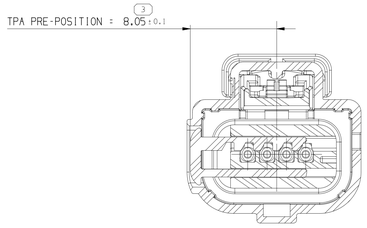

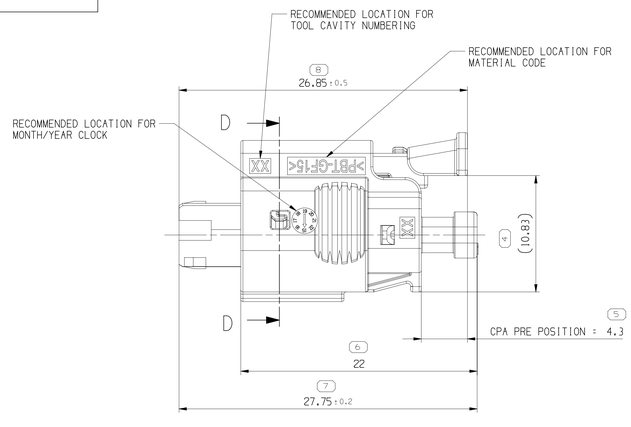

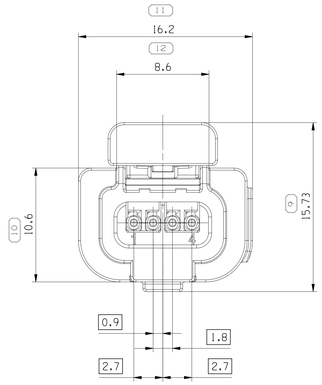

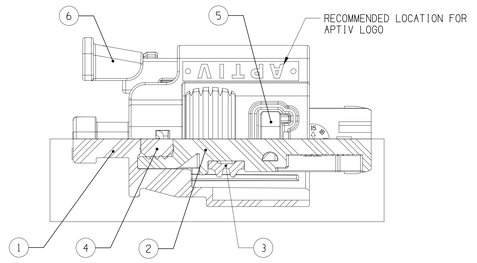

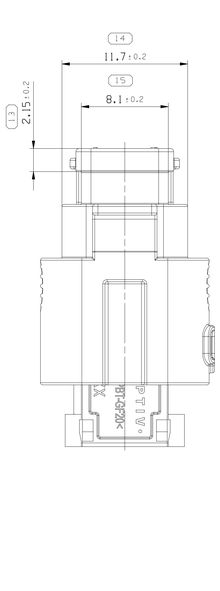

REP.	APTIV P/N	DESIGNATION	QTY	MATERIAL / COLOUR	VOLUME [CM³]
6	35787762	CPA	1	POLYESTER BLEND, RED	0.136
5	35787756	TPA	1	POLYESTER BLEND, VIOLET	0.036
4	35787759	BLOCK SEAL	1	SILICONE, RED BROWN	0.073
3	35790595	CONNECTOR SEAL	1	SILICONE, RED BROWN	0.106
2	35787760	INNER HOUSING	1	POLYESTER BLEND, NATURAL	0.794
1	35787761	OUTER HOUSING	1	POLYESTER BLEND, BLACK	0.864
A	35787740	ASM CONN 4 F CTS 050 BLK SLD	1	-	-

NOTES:

1. UNLESS OTHERWISE SPECIFIED AND/OR INDICATED:
   DIMENSIONS ARE TO FACE OF VIEW SHOWN AND
   AUTOMATICALLY ROUNDED BY COMPUTER FOR INSPECTION
   (SEE MATH MODEL FOR PRECISE DIMENSIONS). FOR TOOL
   OTHER DIMENSIONS NOT SHOWN BUT REQUIRED FOR TOOL
   BUILD, SEE MATH MODEL FOR PRECISE TOOL PATH DATA.
   ALL RADII 0.5
   ALL CHAMFERS 0.5 X45°
   DRAFT IS .5° MAX ON ALL OUTSIDE SURFACE.
   LIKE CAVITIES ARE INDENTICAL.

2. MATERIAL RECYCLING CODE PER ISO 11469. (1.1)X(0.1) CHARACTERS AS SHOWN TO BE LOCATED ON ANY EXTERIOR SURFACE.

3. FOR APPLICATION DATA SEE APPLICATION DRAWING.

4. DELIVERY CONDITION:
   TPA IN PRE-POSITION
   CPA IN PRE-POSITION

A ——— LINE DRAWN THROUGH A PART NUMBER INDICATES THAT PHYSICAL PARTS ARE NOT AVAILABLE FOR ORDERING.

PART NUMBERS THAT DO NOT HAVE A LINE PRESENT INDICATE THAT PHYSICAL PARTS ARE AVAILABLE FOR ORDERING.

CONTACT APTIV SALES TO ASSURE AVAILABILITY OF PARTS.

DWG TYPE: CUSTOMER PART DRAWING

STYLE:

VOLUME (CM³): SEE CHART

DISTR CODE:

UNLESS OTHERWISE SPECIFIED
THIS DOCUMENT IS IN ACCORDANCE WITH ASME Y14.5-2009, SEE APTIV ENGINEERING DESIGN STANDARD B6-2017 FOR ISO 11012004 RECONCILIATION REQUIREMENTS.

ALL DIMENSIONS ARE IN MILLIMETERS

7 PROCESS SENSITIVE DIMENSION

DIMENSIONS ENCLOSED IN ( ) INDICATE REFERENCE DIMENSIONS AND NO TOLERANCE LIMITS ARE ESTABLISHED

REFERENCE

DIMENSIONAL RANGE (MM)									CHART M
FROM	> 0	> 6	> 30	> 70	>120	>160	>200	>250	>315
TO	6	30	70	120	160	200	250	315	400
TOLERANCE UNLESS OTHERWISE SPECIFIED									
	±0.1	±0.2	±0.3	±0.4	±0.45	±0.55	±0.7	±0.85	±1.05
ANGULAR TOLERANCE ±1°									

THIRD ANGLE PROJECTION

DO NOT SCALE
USE MATH DATA
NX

APTIV

CONNECTION SYSTEMS
Chennai, India
COPYRIGHT 2023 APTIV. ALL RIGHTS RESERVED.
THIS DRAWING IS THE PROPERTY OF APTIV AND CONTAINS APTIV CONFIDENTIAL INFORMATION. THE REPRODUCTION, DISTRIBUTION AND UTILIZATION OF THIS DOCUMENT OR ITS RELATED CAD MATH DATA, AS WELL AS COMMUNICATION OF ANY CONTENT TO OTHERS, WITHOUT EXPRESS AUTHORIZATION, IS PROHIBITED.

	DATE
DR	
APVD1 LIU HANQING	16JN23
APVD2 LUKE WANG	16JN23
APVD3 JONNY ZHENG	16JN23
APVD4	
APVD5	

SUBSTANCES OF CONCERN AND RECYCLED CONT 0949001 [0949101]

MATERIAL: SEE CHART

DRAWING NAME: ASM CONN 4 F CTS 050 SLD

DRAWING NUMBER: 35787740

SIZE	SCALE	FRAME NO	SHEET NO	STG	REV	N/P
A0	5:1	1 OF 1	1 OF 1	U	01	-

User: SLK28
Path: S:\PTC\Creo 5.0\Common Files\
Date: 12-Dec-23 Time: 09:29:05