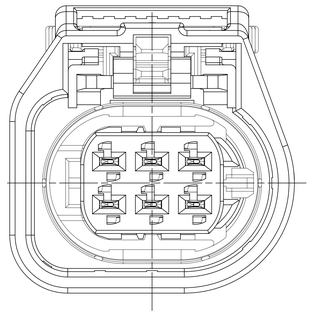

CODE A & CODE B

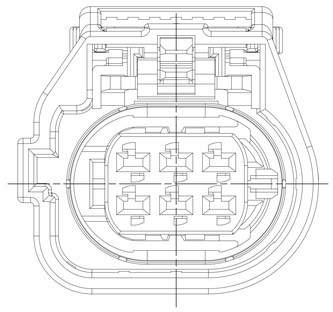

CODE C & CODE D

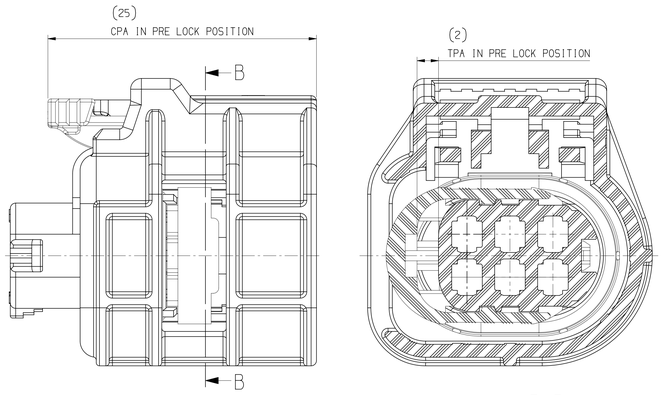

TPA IN PRE LOCK CONDITION
DELIVERY CONDITION FROM DELPHI TO HARNESS MAKER

SECTION B-B

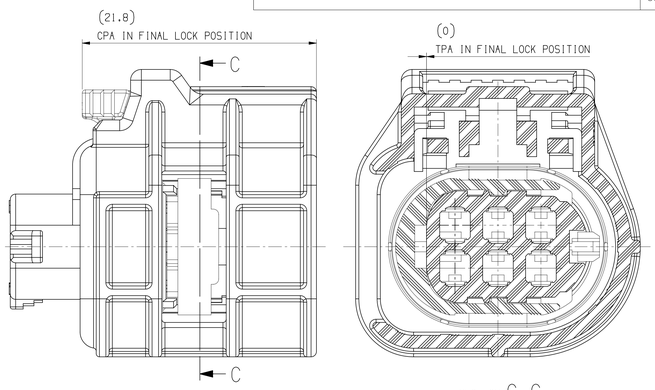

TPA IN FINAL LOCK CONDITION

SECTION C-C

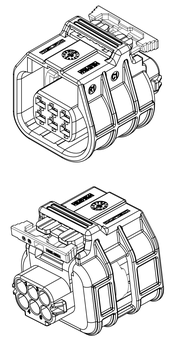

ISOMETRIC VIEW
SCALE 2:1

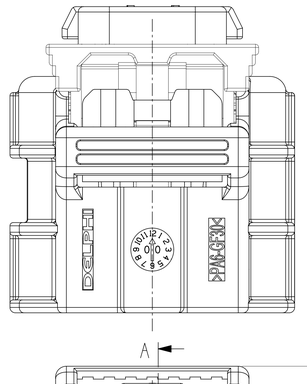

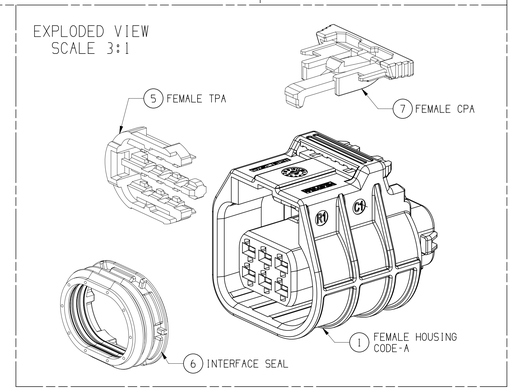

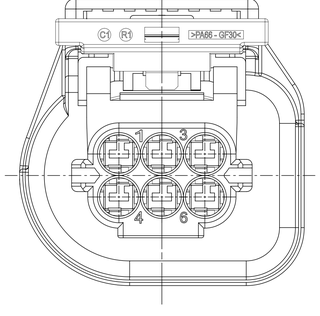

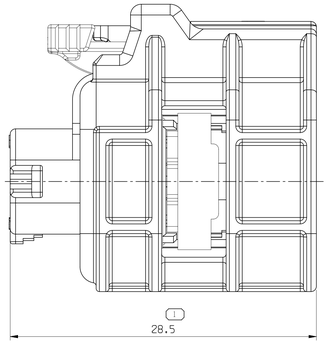

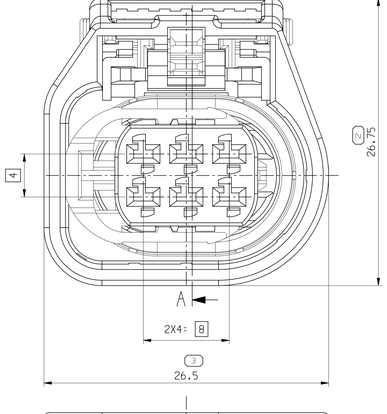

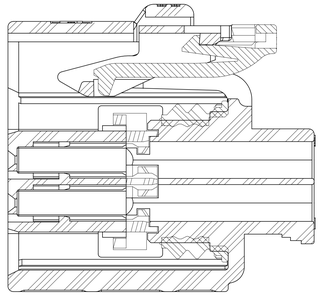

SECTION A-A

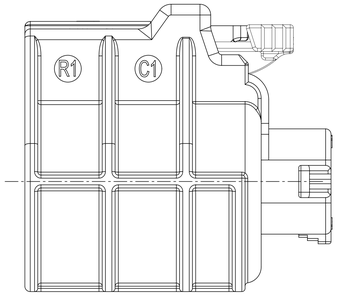

NOTES:

1. NON SPECIFIED TOLERANCE : ISO 2768 (m)
2. MUST BE FREE OF CRACK , FLOW MARK, FLASH, BURR ETC, THAT AFFECT FUNCTION OF PRODUCT
3. MUST MEET HMC SPEC ES91500-00 UNLESS OTHERWISE SPECIFIED TO VENDOR SPECIFICATION.

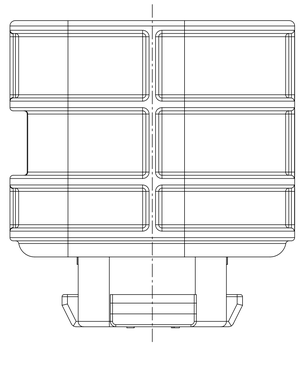

ASSOCIATED PARTS					
PART DESCRIPTION		PART NUMBER	MVL PART NUMBER	WIRE SIZE (mm^2)	AWG
DCK 1.5 FEMALE TERMINAL	Sn PLATED	33405736	-	0.3	22
	Au PLATED	13898605	F427200		
	Sn PLATED	13609029	60002031	0.5-1.0	20-17
	Au PLATED	13609492	60002034		
	Ag PLATED	35268997	-		
	Sn PLATED	13647358	60002041	1.0-1.5	17-15
	Au PLATED	35316965	-		
DCK 1.5 SWS (GRAY)		33318278	-	0.3	22
DCK 1.5 SWS (LIGHT GRAY)		33318279	-	0.5-0.85	20-18
DCK 1.5 SWS (BLACK)		33318275	-	1.0-1.5	17-15
DCK 1.5 CAVITY PLUG (DARK GRAY)		35020635	-	-	

DIN ISO 2768	Tolerance Class medium (m)						
Linear Dimensions except for broken edges	Permissible deviations for basic size range (mm)						
	0.5 *) up to 3	over 3 up to 6	over 6 up to 30	over 30 up to 120	over 120 up to 400	over 400 up to 1000	over 1000 up to 2000
	±0.1	±0.1	±0.2	±0.3	±0.5	±0.8	±1.2
Broken edges (radii, chamfers)	Permissible deviations for basic size range (mm)						
	0.5 *) up to 3		over 3 up to 6		over 6		
	±0.2		±0.5		±1		
	Permissible deviations for ranges of lengths, in mm, of the shorter side of the angle concerned						
Angular dimensions	up to 10	over 10 up to 50	over 50 up to 120		over 120 up to 400		over 400
	±1°	±0° 30'	±0° 20'		±0° 10'		±0° 5'

*) For nominal sizes below 0.5mm, the deviations shall be indicated adjacent to the relevant nominal size(s).

DESCRIPTION	ASSY CODE A	ASSY CODE B	ASSY CODE C	ASSY CODE D	ASSY CODE A	ASSY CODE B	ASSY CODE C	ASSY CODE D
PART NUMBER	35082070	35233903	35173516	35173511	35077996	35286860	35173515	35173510

7	FEMALE CPA	PA66-GF30	BROWN	35078002	X	X	X	X	I	I	I	I
6	INTERFACE SEAL	SILICONE RUBBER	RED	35078003	I	I	I	I	I	I	I	I
5	FEMALE TPA	PA66-GF30	BLUE	35078001	I	I	I	I	I	I	I	I
4	FEMALE HOUSING CODE D	PA6-GF30	GRAY	35173513	X	X	X	I	X	X	X	I
3	FEMALE HOUSING CODE C	PA6-GF30	BLACK	35173517	X	X	I	X	X	X	I	X
2	FEMALE HOUSING CODE B	PA6-GF30	GRAY	35233905	X	I	X	X	X	I	X	X
1	FEMALE HOUSING CODE A	PA6-GF30	BLACK	35078000	I	X	X	X	I	X	X	X
REF	DESIGNATION	MATERIAL	COLOR	PART NUMBER	WITHOUT CPA QTY				WITH CPA QTY			

A LINE DRAWN THROUGH A PART NUMBER INDICATES THAT PHYSICAL PARTS ARE NOT AVAILABLE FOR ORDERING.

PART NUMBERS THAT DO NOT HAVE A LINE PRESENT INDICATE THAT PHYSICAL PARTS ARE AVAILABLE FOR ORDERING.

CONTACT APTIV SALES TO ASSURE AVAILABILITY OF PARTS.

R 0.1 MAX
R 0.2 MAX
SHARP CORNER TOLERANCE

DIM TO CHECK
DIM FOR HELP
THEORETICAL DIM

DIMENSIONAL RANGE (MM)										CHART ET
FROM	0	>6	>30	>70	>100	>150	>200	>250	>300	
TO	6	30	70	100	150	200	250	300	400	
TOLERANCE UNLESS OTHERWISE SPECIFIED										
	±0.15	±0.2	±0.3	±0.4	±0.5	±0.6	±0.8	±1	±1.2	
ANGULAR TOLERANCE ±2°										

DO NOT SCALE
USE MATH DATA

NX

DWG TYP
PART DRAWING

WEIGHT (GR)
VOLUME (CM³)
ROUTING
DISTR CODE D

UNLESS OTHERWISE SPECIFIED

GENERAL TOLERANCES ACCORDING TO: SEE CHART

GD&T ACCORDING TO: ASME Y14.5-2009

ALL DIMENSIONS ARE IN MILLIMETERS

REFERENCE

THIRD ANGLE PROJECTION

MATERIAL
SEE NOTES

DRAWING NAME
DCK1.5 6WAY FEMALE CONNECTOR ASSEMBLY TAXI DRAWING

DRAWING NUMBER
35173512

SIZE	SCALE	FRAME NO	SHEET NO	STG	REV	N/P
A0	5:1	1 OF 1	1 OF 1	R	01	-

•APTIV•
CONNECTION SYSTEMS
Chennai, India
COPYRIGHT 2020 APTIV. ALL RIGHTS RESERVED.
THIS DRAWING IS THE PROPERTY OF APTIV AND CONTAINS APTIV CONFIDENTIAL INFORMATION. THE REPRODUCTION, DISTRIBUTION AND UTILIZATION OF THIS DOCUMENT OR ITS RELATED CAD MATH DATA, AS WELL AS COMMUNICATION OF ANY CONTENT TO OTHERS, WITHOUT EXPRESS AUTHORIZATION, IS PROHIBITED.

		DATE
DR	KANG,DONG-JU	30MY18
APVD1	SEO,JU-WON	30MY18
APVD2	PARK,JOO-HYUN	30MY18
APVD3		
APVD4		
APVD5		

SUBSTANCES OF CONCERN AND RECYCLED CONTENT PER APTIV 1094901

DWG STATUS						ZONE	REVISION HISTORY	AUTH	DR	APVD 1	APVD 2
DATE	STG	REV	N/P	CHG	ECN						
30MY18	R	01	-	-			INITIAL RELEASE		KDJ	SJW	PJH

User: PJOOB
DOCS-PLOT-20180125-091401.pdf, Date: 25-Oct-20 Time: 17:58:06