CODINGS SCALE 2:1

CODING A

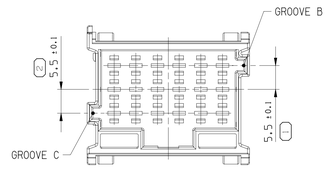

CODING B

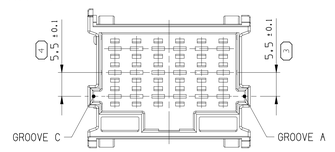

CODING C

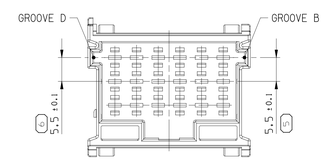

CODING D ⚠6

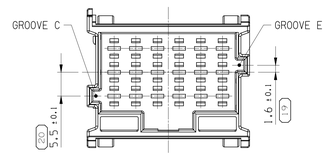

12WAY SCALE 2:1

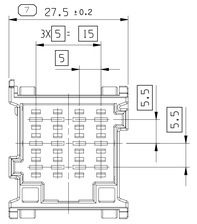

15WAY SCALE 2:1

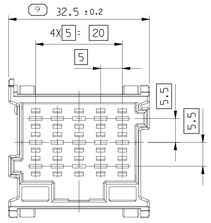

18WAY SCALE 2:1

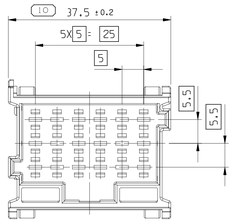

21WAY SCALE 2:1

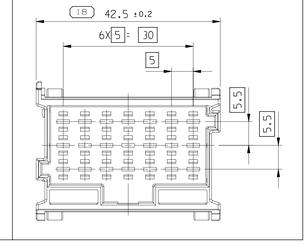

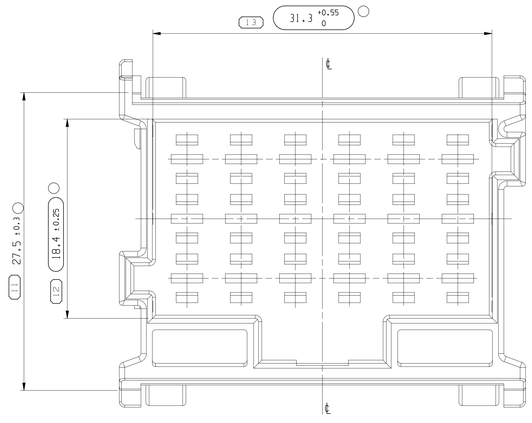

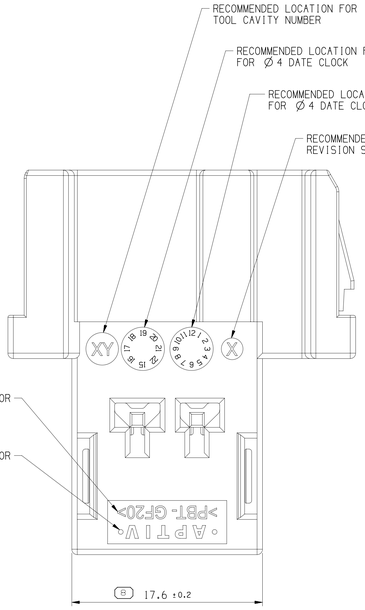

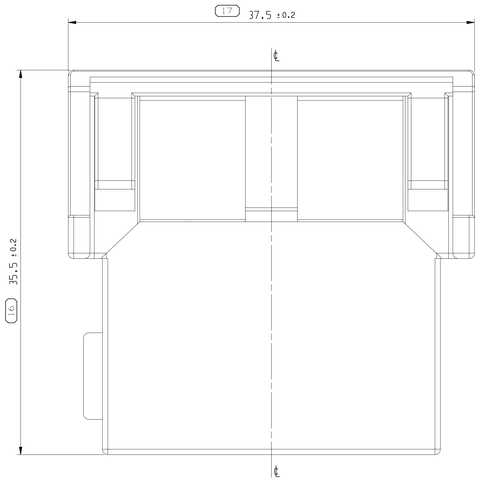

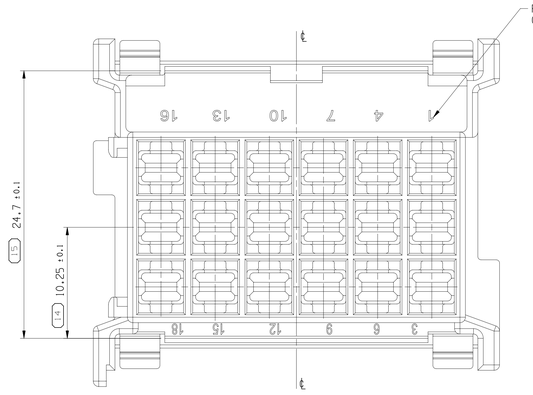

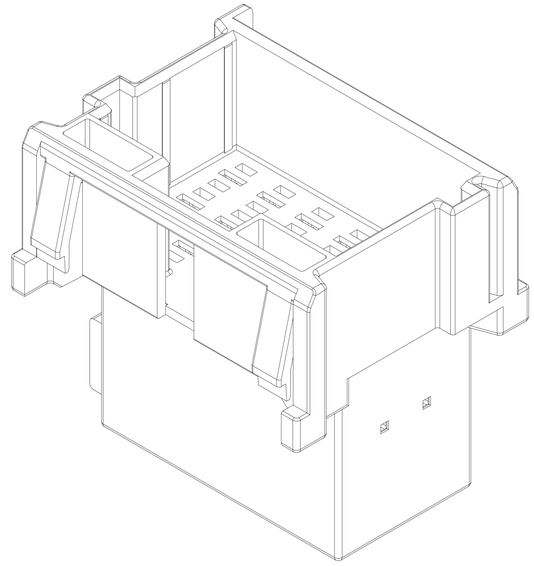

3D VIEW

21W MALE HOUSING	CODE C	35393024	BLUE	9.97	35393033	35387561
	CODE B	35393023	YELLOW		35393032	
	CODE A	35497025	GRAY		35497024	
		35497026	RUST BROWN		35497023	
		35387554	BLACK		35387553	
18W MALE HOUSING	CODE D	35497018	HEATHER VIOLET	8.82	35497021	35387560
	CODE C	35393022	BLUE		35393031	
	CODE B	35497017	NATURAL		35497022	
		35393021	YELLOW		35393030	
	CODE A	35497019	GRAY		35497020	
		35387555	BLACK		35387552	
15W MALE HOUSING	CODE C	35393020	BLUE	7.66	35393028	35387559
	CODE B	35497016	NATURAL		35497015	
		35393019	YELLOW		35393027	
	CODE A	35497013	PURPLE		35497014	
		35387556	BLACK		35387551	
12W MALE HOUSING	CODE C	35393018	BLUE	6.51	35393026	35387558
	CODE B	35393017	YELLOW		35393025	
	CODE A	35497011	GREEN		35497012	
		35387557	BLACK		35387550	
PART NAME	CODING	APTIV-PART NO.	COLOUR	VOLUME(CM³)	MATING APTIV-PART NO.	MATING TPA NO.

SYMBOL DEFINITION

A DIMENSION WITHOUT AN INSPECTION REPORT SYMBOL ( ) DOES NOT REQUIRE INSPECTION. IT MAY BE CONTROLLED ON THE INDIVIDUAL COMPONENT DRAWING.

TOTAL NO OF INSPECTIONS REQUIRED	20
LAST NO. USED	20

MISSING SYMBOLS

NO MISSING SYMBOL NUMBER

DWG STATUS					ZONE	REVISION HISTORY	AUTH	DR	APVD 1	APVD 2
DATE	STG	REV	N/P	CHG						
21AU19	R	01	-	-		CREATED PART DRAWING	445526		ANJ	SAT
17JL20	R	01	AA	-		PRODUCTION MONTH LOGO UPDATED PRODUCTION YEAR LOGO ADDED TOLERENCE FOR DIM. 11,12,13 ARE UPDATED NOTE 3, 4, 5 ADDED BOM TABLE UPDATED	445526		HAO	SUB
18DE20	R	01	AB	-		NOTE 6 ADDED DIM. NO. 19 & 20 ADDED BOM TABLE UPDATED	446236		HAO	SUB

1. UNLESS OTHERWISE SPECIFIED AND/OR INDICATED:

   DIMENSIONS ARE TO FACE OF VIEW SHOWN AND AUTOMATICALLY ROUNDED BY COMPUTER FOR INSPECTION (SEE MATH MODEL FOR PRECISE DIMENSIONS). FOR ALL OTHER DIMENSIONS NOT SHOWN BUT REQUIRED FOR TOOL BUILD SEE MATH MODEL FOR PRECISE TOOL PATH DATA.

2. FOR UNDIMENSIONED GEOMETRY REFER 3D MODEL

3. MATING FEMALE HOUSING INFORMATION: SEE TABLE

4. MATING TPA INFORMATION: SEE TABLE

5. MATING MALE TERMINAL:

TERMINAL	TERMINAL PLATING	CABLE SIZE IN MM²
10774272 (60110631)	Hot Tin, SN	0.22-0.35
10774271 (60110611)	Hot Tin, SN	0.5-1.0
10756896 (60110641)	Hot Tin, SN	1.5-2.5
10779250 (60110634)	Ni	0.22-0.35
33500679 (60110614)	Ni	0.5-1.0
33523306 (60110644)	Ni	1.5-2.5

⚠6 APPLICABLE ONLY FOR 18W

A — LINE DRAWN THROUGH A PART NUMBER INDICATES THAT PHYSICAL PARTS ARE NOT AVAILABLE FOR ORDERING.

PART NUMBERS THAT DO NOT HAVE A LINE PRESENT INDICATE THAT PHYSICAL PARTS ARE AVAILABLE FOR ORDERING.

CONTACT APTIV SALES TO ASSURE AVAILABILITY OF PARTS.

DWG TYPE: PART DRAWING

STYLE: -

VOLUME (CM³): SEE CHART

DISTR CODE:

UNLESS OTHERWISE SPECIFIED
THIS DOCUMENT IS IN ACCORDANCE WITH ASME Y14.5-2009. SEE APTIV ENGINEERING DESIGN STANDARD 8A-2017 FOR ISO 10110:2004 RECONCILIATION REQUIREMENTS.

ALL DIMENSIONS ARE IN MILLIMETERS

(16) PROCESS SENSITIVE DIMENSION

DIMENSIONS ENCLOSED IN ( ) INDICATE REFERENCE DIMENSIONS AND NO TOLERANCE LIMITS ARE ESTABLISHED

REFERENCE

DIMENSIONAL RANGE (MM)										
FROM	> 0	> 6	> 30	> 70	>120	>160	>200	>250	>315	
TO	6	30	70	120	160	200	250	315	400	CHART M
TOLERANCE UNLESS OTHERWISE SPECIFIED	±0.1	±0.2	±0.3	±0.4	±0.45	±0.55	±0.7	±0.85	±1.05	
ANGULAR TOLERANCE ±1°										

THIRD ANGLE PROJECTION

DO NOT SCALE
USE MATH DATA

NX

•APTIV•
CONNECTION SYSTEMS
Chennai, India

COPYRIGHT 2019 APTIV. ALL RIGHTS RESERVED.
THIS DRAWING IS THE PROPERTY OF APTIV AND CONTAINS APTIV CONFIDENTIAL INFORMATION. THE REPRODUCTION, DISTRIBUTION AND UTILIZATION OF THIS DOCUMENT OR ITS RELATED CAD MATH DATA, AS WELL AS COMMUNICATION OF ANY CONTENT TO OTHERS, WITHOUT EXPRESS AUTHORIZATION, IS PROHIBITED.

	DATE
DR	
APVD1 K.ANJANEYULU	21AU19
APVD2 V.SATHISH	21AU19
APVD3 SUIBIN HUANG	21AU19
APVD4	
APVD5	

SUBSTANCES OF CONCERN AND RECYCLED CONT|0949001|0949001

MATERIAL: POLYESTER BLEND

DRAWING NAME: TAXI CONN 0 M DCS-2 2.8

DRAWING NUMBER: 35388525

SIZE	SCALE	FRAME NO	SHEET NO	STG	REV	N/P
A0	5:1	1 OF 1	1 OF 1	R	01	AB