SYMBOL DEFINITION		
A DIMENSION WITHOUT AN INSPECTION REPORT SYMBOL ( ) DOES NOT REQUIRE INSPECTION. IT MAY BE CONTROLLED ON THE INDIVIDUAL COMPONENT DRAWING.	TOTAL NO OF INSPECTIONS REQUIRED	22
	LAST NO. USED	35

MISSING SYMBOLS
19-31

DWG STATUS DATE	STG	REV	N/P	CHG	ZONE	REVISION HISTORY	AUTH	DR	APVD 1	APVD 2
09MY10	R	01	-	-		CREATED SHEET 2.	414128	LLJ	LLJ	HL
02FE12	R	02	-	-		ALL PARTS-REVISED PLASTIC TIP AND ADDED PROCESS SENSITIVE NOTE. 13944148 & 13944149-ADDED NEW PART NUMBERS.	416945	LLJ	LLJ	HL
02AP12	R	03	-	-		ALL PARTS-ADDED VENDOR PART NUMBER. 13884351 & 13884353-INCREASED CABLE RANGE TO 6.0 MM².	417671	LLJ	LLJ	HL
14MY12	R	04	-	-		ALL PARTS - ADDED "HARNESS MANUFACTURER", "SOLDERED CRIMPS" AND "PROPER SOLDERING" NOTES.	418163	LLJ	LLJ	HL
12NO12	R	05	-	-		ALL PARTS-ADDED GROOVE AND DIMS 32-35.	420361	LLJ	LLJ	BM
24AP14	R	06	-	-		ALL PARTS - CORRECTED "PROCESS SENSITIVE DIMENSION" NOTE	426201	ORA	JAA	BM
17DE20	R	07	-	-		13944149,48,13884352,50 - UPDATED CABLE SIZE	553187	AHG	AHG	MF
26MY21	R	08	-	-		13944149, 13884352-53 - DIM 19.5 +/-0.2 WAS DIM 19.5 +/-0.1	554404	AHY	JAA	OM
23MY23	R	09	-	-		13884351 & 13884353 - CABLE SIZE WAS 10GA (5.3 MM2 - 6.0 MM2)	560524	GDH	JAA	JP

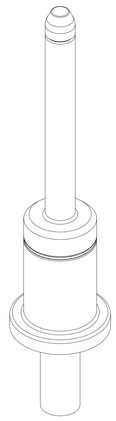

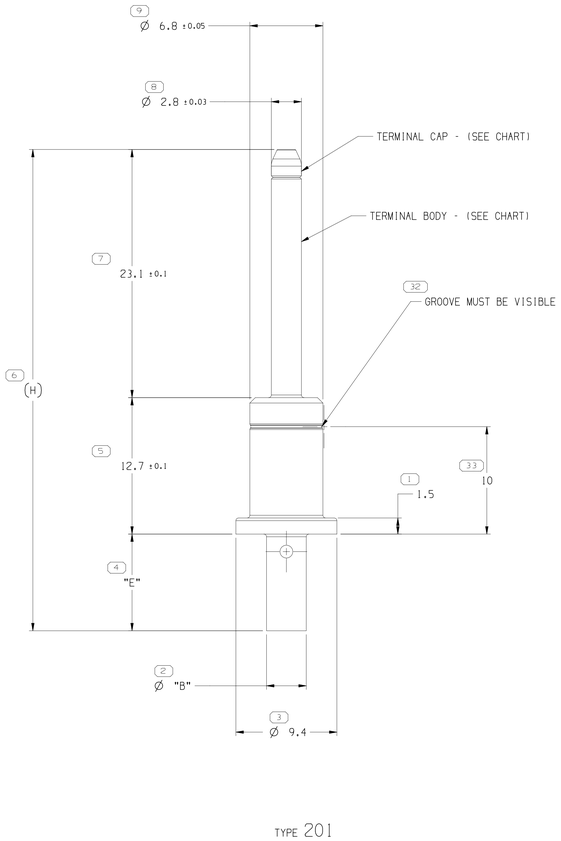

TYPE 201

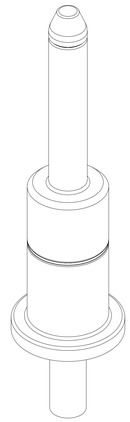

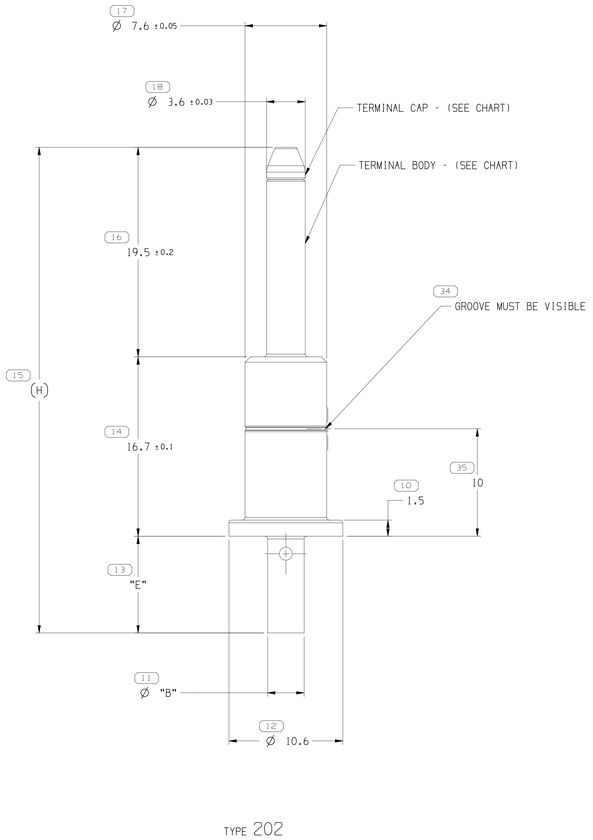

TYPE 202

NOTES

1. UNLESS OTHERWISE SPECIFIED AND/OR INDICATED:

   DIMENSIONS ARE TO FACE OF VIEW SHOWN AND AUTOMATICALLY ROUNDED BY COMPUTER FOR INSPECTION (SEE MATH MODEL FOR PRECISE DIMENSIONS). FOR ALL OTHER DIMENSIONS NOT SHOWN BUT REQUIRED FOR TOOL BUILD, SEE MATH MODEL FOR PRECISE TOOL PATH DATA.

2. PINS MUST BE FREE OF BURRS, SHARP EDGES, OIL, GREASE OR OTHER CONTAMINANTS.
3. COMPONENTS MUST BE PACKAGED IN A SEALED BAG.
4. PROCESS SENSITIVE DIMENSION FOR TYPE 201 IS DIM 8.
   PROCESS SENSITIVE DIMENSION FOR TYPE 202 IS DIM 18.
5. HARNESS MANUFACTURER IS RESPONSIBLE FOR VALIDATING THE CRIMP AS APPLIED ON CABLE TO CUSTOMER APPLICATION REQUIREMENTS.
6. SOLDERED CRIMPS ARE RECOMMENDED FOR THE EV CHARGING APPLICATION.
7. PROPER SOLDERING METHOD MUST BE USED TO PREVENT DAMAGE TO PLASTIC TIP.

SEE PROCESS SENSITIVE NOTE

PART NO	REV	N/P	TYPE	VENDOR PART NUMBER	TERMINAL BODY MATERIAL	TERMINAL CAP MATERIAL	CONTACT PLATING	CABLE SIZE	Ø "B" ±0.03	"E"	(H)
13944149	03	AB	202	118 252 000 249	COPPER BRASS ALLOY 1/2 HARD	PA66 (ULV-0)	SILVER	12 GA. (2.5 - 3 MM²)	3.81	9	45.2
13944148	03	AA	201	118 242 000 249	COPPER BRASS ALLOY 1/2 HARD	PA66 (ULV-0)	SILVER	12 GA. (2.5 - 3 MM²)	3.81	9	44.8
13884353	04	AB	202	118 251 000 249	COPPER BRASS ALLOY 1/2 HARD	PA66 (ULV-0)	SILVER	10 GA. (5 MM² - 6 MM²)	5.3	10	46.2
13884352	04	AB	202	118 250 000 249	COPPER BRASS ALLOY 1/2 HARD	PA66 (ULV-0)	SILVER	14 GA. (2.1 - 2.5 MM²)	3.4	9	45.2
13884351	04	AA	201	118 241 000 249	COPPER BRASS ALLOY 1/2 HARD	PA66 (ULV-0)	SILVER	10 GA. (5 MM² - 6 MM²)	5.3	10	45.8
13884350	04	AA	201	118 240 000 249	COPPER BRASS ALLOY 1/2 HARD	PA66 (ULV-0)	SILVER	14 GA. (2.1 - 2.5 MM²)	3.4	9	44.8

A ——— LINE DRAWN THROUGH A PART NUMBER INDICATES THAT PHYSICAL PARTS ARE NOT AVAILABLE FOR ORDERING.

PART NUMBERS THAT DO NOT HAVE A LINE PRESENT INDICATE THAT PHYSICAL PARTS ARE AVAILABLE FOR ORDERING.

CONTACT APTIV SALES TO ASSURE AVAILABILITY OF PARTS.

DWG TYPE: PART DRAWING

STYLE

VOLUME (CM³)

DISTR CODE

UNLESS OTHERWISE SPECIFIED

THIS DOCUMENT IS IN ACCORDANCE WITH ASME Y14.5M-1994 AS AMENDED BY THE GM GLOBAL DIMENSIONING AND TOLERANCING ADDENDUM 2021. SEPARATE PATTERNS OF FEATURES MAY BE GAGED SEPARATELY REGARDLESS OF DATUM REFERENCES.

ALL DIMENSIONS ARE IN MILLIMETERS

REFERENCE

(8) PROCESS SENSITIVE DIMENSION

DIMENSIONS ENCLOSED IN ( ) INDICATE REFERENCE DIMENSIONS AND NO TOLERANCE LIMITS ARE ESTABLISHED

DIMENSIONAL RANGE (MM)	CHART D
FROM 0 TO 12	>12
TOLERANCE UNLESS OTHERWISE SPECIFIED	±0.1 / ±0.2
ANGULAR TOLERANCE ±2°	

THIRD ANGLE PROJECTION

DO NOT SCALE

USE MATH DATA

NX

•APTIV•

CONNECTION SYSTEMS

WARREN, OH

COPYRIGHT 2011 APTIV. ALL RIGHTS RESERVED.

THIS DRAWING IS THE PROPERTY OF APTIV AND CONTAINS APTIV CONFIDENTIAL INFORMATION. THE REPRODUCTION, DISTRIBUTION AND UTILIZATION OF THIS DOCUMENT OR ITS RELATED CAD MATH DATA, AS WELL AS COMMUNICATION OF ANY CONTENT TO OTHERS, WITHOUT EXPRESS AUTHORIZATION, IS PROHIBITED.

	DATE
DR	
APVD1 L. JONES	09MY11
APVD2 L. JONES	09MY11
APVD3 HOI LUI	09MY11
APVD4	
APVD5	

SUBSTANCES OF CONCERN AND RECYCLED CONTENT PER APTIV 10949001

MATERIAL: SEE CHART

DRAWING NAME: TAXI TERM M SLV/PIN AG

DRAWING NUMBER: 13826633

SIZE	SCALE	FRAME NO	SHEET NO	STG	REV	N/P
A0	5:1	1 OF 2	2 OF 3	R	09	-

User: LLJ
Part: 13826633_SHEET 2.prt
Plot: 13826633_SHEET 2.dwg, Plotter: 24-May-23
Time: 141201:45