DWG STATUS DATE	STG	REV	N/P	CHG	ZONE	REVISION HISTORY	AUTH	DR	APVD 1	APVD 2
13AP21	R	01	-	-		INITIAL RELEASE		G.UVA	V.SAT	R.GOM
25OC21	R	01	AA			APTIV PART NUMBERS ADDED		W.BAC	K.FAR	M.GRU
24FE22	R	02				CHANGE FROM PROTOTYPE TO SERIAL DESIGN		W.BAC	P.NAJ	M.GRU
02JN23	R	02	AA			APTIV SINGLE PART NO. ADDED		W.BAC	P.NAJ	

CODING RIB

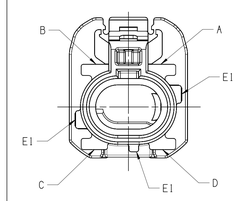

GRAPHICAL REPRESENTATION SHOWS INSTALLED CONDITION WITH CONTACT

SCALE 2:1

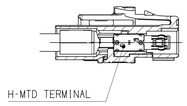

PIN ASSIGNMENT

PORT	PIN	SHIELD
01	1,2	1S

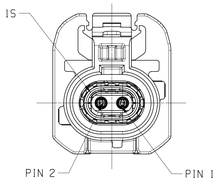

RING GAGE

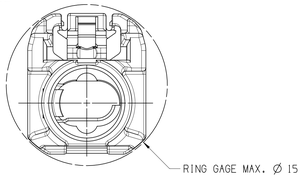

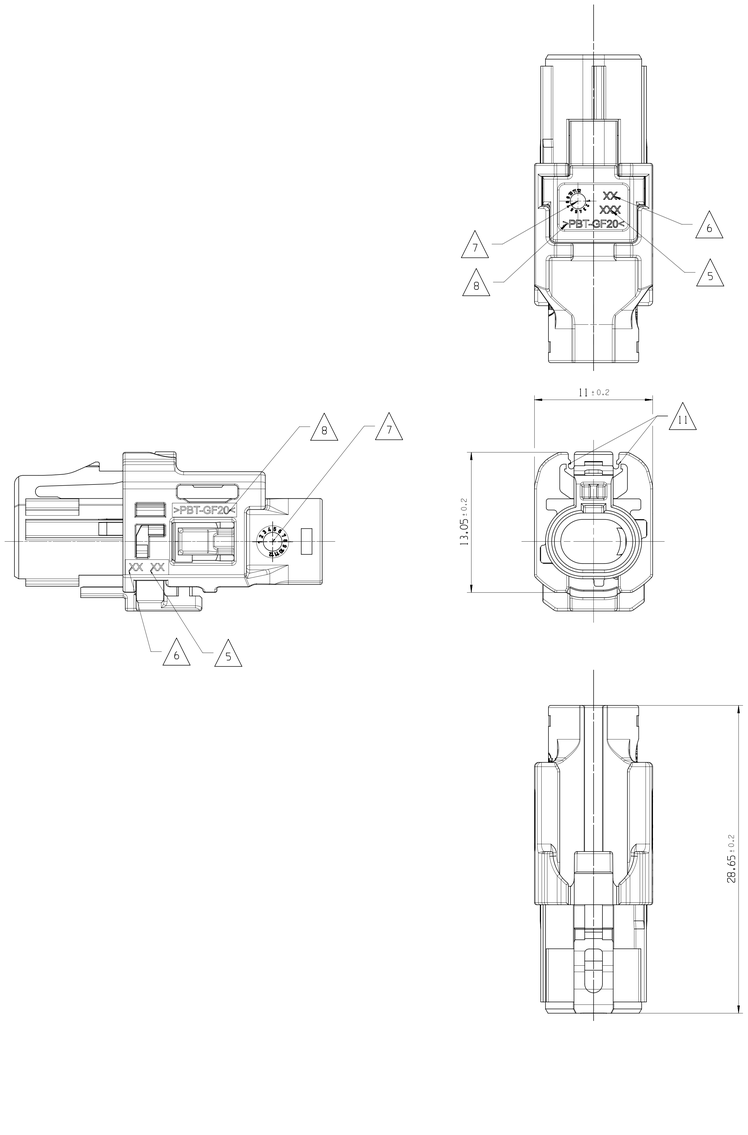

SECTION C-C 5:1

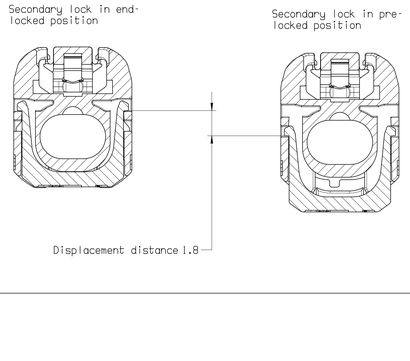

EXPLODED VIEW

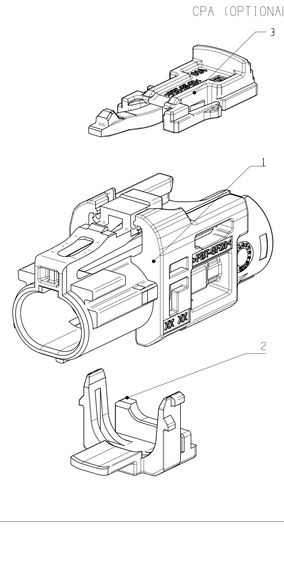

DESIGNATION	CODING	CODING RIB	APTIV SERIAL ASSEMBLY NO.	APTIV PROTOTYPE ASSEMBLY NO.	ASSEMBLY REV.	WEIGHT	35545990	35545991	35545993	35545994	35545995	35545996	35545983	35644772	35453737	APTIV SINGLE PART NO.
							BLACK	WHITE	BLUE	VIOLET	GREEN	BROWN	WATER BLUE	PURPLE	RED	COLOUR
							PBT GF20									MATERIAL
							HOUSING							TPA	CPA	DESIGNATION
							1							2	3	POS. NO.
							APTIV ASSEMBLY									
1 PORT H-MTD UNSEALED FEMALE CONNECTOR	Z	E1	35650360	-	-	2.1							X		X	
			35546260	-	-	1.85									-	
	F	A-D-E1	35650359	-	-	2.1						X			X	
			35546270	-	-	1.85									-	
	E	B-C-E1	35650358	-	-	2.1					X				X	
			35546268	-	-	1.85									-	
	D	C-D-E1	35650357	-	-	2.1				X				X	X	
			35546266	-	-	1.85									-	
	C	B-D-E1	35650356	-	-	2.1			X						X	
			35546265	-	-	1.85									-	
	B	A-C-E1	35650355	-	-	2.1		X							X	
			35546262	-	-	1.85									-	
	A	A-B-E1	35650354	PE475517	-	2.1	X								X	
			35546261	PE496289	-	1.85									-	

NOTES

	GENERAL
1	ASSEMBLY INSTRUCTION NO.: 35537714
2	SHOWN CODING IS OPTION 1 "A" 1; OTHER CODINGS SEE VARIANT TABLE
3	DELIVERY CONDITION AS ON MAIN VIEWS : SECONDARY LOCK IN OPEN POSITION BUT CLOSED SECONDARY LOCK IS NOT A DEFECT
	MATERIALS
4	MATERIAL: 1 SEE BOM 1 COLOUR: 1 SEE BOM 1
	PART MARKINGS
5	MOULD CAVITY MARKING
6	PART REV
7	DATE CLOCK MONTH/YEAR
8	MATERIAL IDENTIFICATION
9	APTIV COMPANY LOGO
10	H-MTD LOGO
11	DELIVERY CONDITION WITH THE LOCKING LATCH LINKS BREAKAGE

LINE DRAWN THROUGH A PART NUMBER INDICATES THAT PHYSICAL PARTS ARE NOT AVAILABLE FOR ORDERING.

PART NUMBERS THAT DO NOT HAVE A LINE PRESENT INDICATE THAT PHYSICAL PARTS ARE AVAILABLE FOR ORDERING.

CONTACT APTIV SALES TO ASSURE AVAILABILITY OF PARTS.

R 0.1 MAX
R 0.2 MAX
SHARP CORNER TOLERANCE

DIM TO CHECK	DIMENSIONAL RANGE (MM) CHART E1									
	FROM	> 0	> 20	> 30	> 70	>100	>150	>200	>250	>300
1 1 DIM FOR HELP	TO	20	30	70	100	150	200	250	300	400
	TOLERANCE UNLESS OTHERWISE SPECIFIED									
THEORETIC DIM		±0.15	±0.2	±0.3	±0.4	±0.5	±0.6	±0.8	±1	±1.2
	ANGULAR TOLERANCE ±2°									

DWG TYPE
PART DRAWING

WEIGHT (GR)
SEE TABLE

VOLUME (CM³)

DISTR CODE
D

ROUTING
-

UNLESS OTHERWISE SPECIFIED

GENERAL TOLERANCES ACCORDING TO: SEE TABLE

GD&T ACCORDING TO: SEE TABLE

REFERENCE
-

FIRST ANGLE PROJECTION

DO NOT SCALE

USE MATH DATA

SCALE
1:1

•APTIV•

CONNECTION SYSTEMS
Chennai, India

COPYRIGHT 2021 APTIV. ALL RIGHTS RESERVED.

THIS DRAWING IS THE PROPERTY OF APTIV AND CONTAINS APTIV CONFIDENTIAL INFORMATION. THE REPRODUCTION, DISTRIBUTION AND UTILIZATION OF THIS DOCUMENT OR ITS RELATED CAD MATH DATA, AS WELL AS COMMUNICATION OF ANY CONTENT TO OTHERS, WITHOUT EXPRESS AUTHORIZATION, IS PROHIBITED.

		DATE
DR:	G.UVARAJ	05AP21
APVD1:	V.SATHISH	05AP21
APVD2:	R.GOMEZ	05AP21
APVD3:		
APVD4:		
APVD5:		

SUBSTANCES OF CONCERN AND RECYCLED CONTENT PER APTIV [094900]

MATERIAL:
SEE TABLE

DRAWING NAME
1 PORT FEMALE H-MTD UNSEALED

DRAWING NUMBER
35537714

SIZE	SCALE	FRAME NO	SHEET NO	STG	REV	N/P
A0	5:1	1 OF 1	1 OF 1	R	02	AA

UNCONTROLLED DOCUMENTS SEE ONLY AVAILABLE ON THE SERVER

Upgrade: CAD6x1
Template: 35537714_CAD6x1_SOLIDCAM
CCB1: 5022714 CCB2: 5022714 CCB3: 5022714
Date: 02-Jan-23 Time: 11:53:20