SYMBOL DEFINITION		
A DIMENSION WITHOUT AN INSPECTION REPORT SYMBOL (__) DOES NOT REQUIRE INSPECTION. IT MAY BE CONTROLLED ON THE INDIVIDUAL COMPONENT DRAWING.	TOTAL NO OF INSPECTIONS REQUIRED	7
	LAST NO. USED	5

MISSING SYMBOLS
NO MISSING SYMBOL NUMBER

DWG STATUS										
DATE	STG	REV	N/P	CHG	ZONE	REVISION HISTORY	AUTH	DR	APVD 1	APVD 2
10JN13	R	01	-	-	-	PART NUMBER WAS PE23B737	421015	BCR	POT	JAM
14NO13	R	02	-	-	-	ADDED REF. ASSEMBLY VIEW, CHANGED NOTES AND UPDATED PARTS	424631	POT	JAM	MF

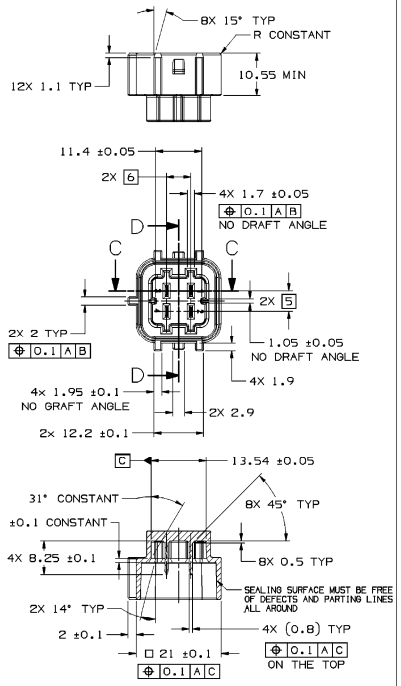

NOTES:

1. UNLESS OTHERWISE SPECIFIED AND/OR INDICATED:

   DIMENSIONS ARE TO FACE OF VIEW SHOWN AND AUTOMATIVALLY ROUNDED BY COMPUTER FOR INSPECTION (SEE MATH MODEL FOR PRECISE DIMENSIONS). FOR ALL OTHER DIMENSIONS NOT SHOWN BUT REQUIRED FOR TOOL BUILD, SEE MATH MODEL FOR PRECISE TOOL PATH DATA. ALL RADII 0.4

2. OUTSIDE SURFACES NO DRAFT ANGLED
3. STANDARD TAB 2.8 X 0.8 (SEE ESD20062)

MATING CONNECTOR INFORMATION

INSPECTION SYMBOLS SHOWN IN THESE VIEWS ARE FOR REFERENCE ONLY

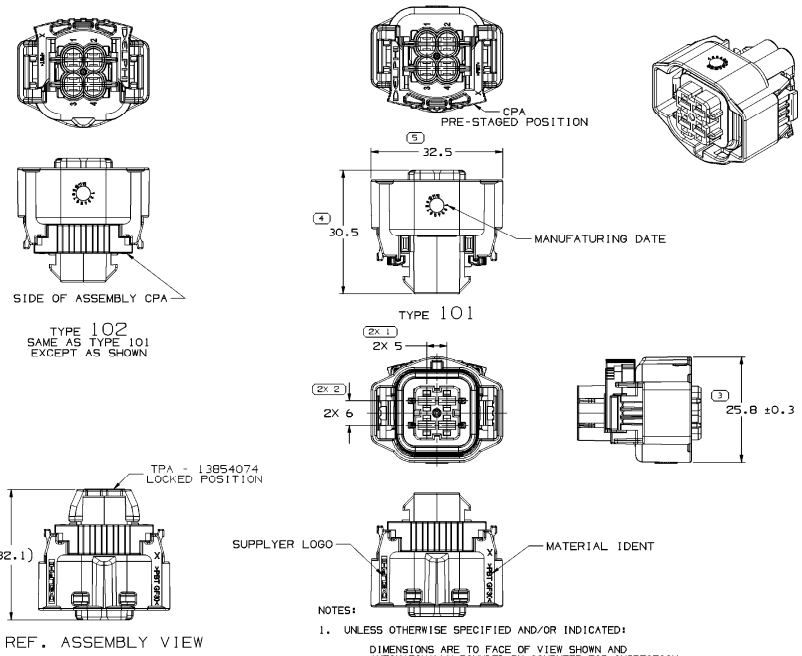

REF. ASSEMBLY VIEW

NOTES:

1. UNLESS OTHERWISE SPECIFIED AND/OR INDICATED:

   DIMENSIONS ARE TO FACE OF VIEW SHOWN AND AUTOMATIVALLY ROUNDED BY COMPUTER FOR INSPECTION (SEE MATH MODEL FOR PRECISE DIMENSIONS). FOR ALL OTHER DIMENSIONS NOT SHOWN BUT REQUIRED FOR TOOL BUILD, SEE MATH MODEL FOR PRECISE TOOL PATH DATA.

2. REFERENCE MATING COMPONENTS OR EQUIVALENT:

   TERMINAL POSITION ASSURANCE - 13854074
   TERMINAL ATS 280 SLD (SEE NOTE 3)
   CABLE SEAL (SEE NOTE 3)

3. CAVITY TERMINAL INFORMATION:

   TERM ATS 280: CAVITIES 1 TO 4

TERM ATS 280	DIN CABLES	JASO CABLES	CAVITY PLUG
15344659	0.5 SQ	0.5 SQ	15337197
15344661	0.75-1.0 SQ	0.75-1.25 SQ	
15344660	1.5-2.5 SQ	2.0 SQ	

   CABLE SEAL : 15327860 FOR CABLE OD 1.2-2.0 mm BLUE
   15327863 FOR CABLE OD 2.0-2.7 mm RED/BROWN
   15327859 FOR CABLE OD 2.7-2.9 mm MAIZE

4. FOR APPLICATION DATA SEE THE INDIVIDUAL APPLICATION DRAWINGS.

15523269	02	-	102	15523268	POLYESTER COMPOUND BLK	01	13854070	SILICONE BLUE	01	13967308	POLYESTER COMPOUND YEL	01
13967306	02	-	101	13967307	POLYESTER COMPOUND BLK	01			01			01
ASM PART NUMBER	REV	N/P	TYPE	PART NUMBER	MAT'L & COLOR	QT	PART NUMBER	MAT'L & COLOR	QT	PART NUMBER	MAT'L & COLOR	QT
				CONNECTOR			CONNECTOR SEAL			CPA		

(N/A) PROCESS SENSITIVE DIMENSION

DIMENSIONS ENCLOSED IN ( ) INDICATE REFERENCE DIMENSIONS AND NO TOLERANCE LIMITS ARE ESTABLISHED

DIMENSIONAL RANGE (MM)									CHART A
FROM TO	> 0 20	> 20 30	> 30 70	> 70 100	>100 150	>150 200	>200 250	>250 300	>300 400
TOLERANCE UNLESS OTHERWISE SPECIFIED									
	±0.15	±0.2	±0.3	±0.4	±0.5	±0.6	±0.8	±1	±1.2
ANGULAR TOLERANCE ±2°									

A LINE DRAWN THROUGH A PART NUMBER INDICATES THAT PHYSICAL PARTS ARE NOT AVAILABLE FOR ORDERING.

PART NUMBERS THAT DO NOT HAVE A LINE PRESENT INDICATE THAT PHYSICAL PARTS ARE AVAILABLE FOR ORDERING.

CONTACT DELPHI SALES TO ASSURE AVAILABILITY OF PARTS.

DWG TYPE: PART DRAWING

STYLE

VOLUME (CU.F.)

DISTR CODE

UNLESS OTHERWISE SPECIFIED

THIS DOCUMENT IS IN ACCORDANCE WITH ASME Y14.5M-1994 AS AMENDED BY ASME Y14.5M-1994 ADDENDUM 1 TOLERANCING ADDENDUM-2001. SEPARTE PATTERNS OF FEATURES MAY BE BASED SEPARATELY REGARDLESS OF DATUM REFERENCES.

ALL DIMENSIONS ARE IN MILLIMETERS

REFERENCE

FIRST ANGLE PROJECTION

DO NOT SCALE

USE MATH DATA

NX

DELPHI

DELPHI PACKARD ELECTRICAL/ELECTRONIC ARCHITECTURE

WARREN, OH

COPYRIGHT 2013 DELPHI CORPORATION AND/OR ITS AFFILIATES.
ALL RIGHTS RESERVED.
REVISED 2013
THIS DRAWING IS THE PROPERTY OF DELPHI CORPORATION AND CONTAINS DELPHI CONFIDENTIAL INFORMATION. THE REPRODUCTION, DISTRIBUTION AND UTILIZATION OF THIS DOCUMENT OR ITS RELATED CAD MATH DATA, AS WELL AS COMMUNICATION OF ANY CONTENT TO OTHERS, WITHOUT EXPRESS AUTHORIZATION, IS PROHIBITED.

		DATE
DR		
APVD1	BRUNO RABELO	25JA13
APVD2	PAULO TUDESCHINI	25JA13
APVD3	JOAO MORAES	25JA13
APVD4	MARCIO FERRUCIO	25JA13
APVD5		

SUBSTANCES OF CONCERN AND RECYCLED CONTENT PER DELPHI [0949001]

MATERIAL: SEE DRAWING

DRAWING NAME: TAXI ASM CONN 4 F 2.8 ATS SLD

DRAWING NUMBER: 15523270

SIZE	SCALE	FRAME NO	SHEET NO	STG	REV	N/P
A1	2:1	1 OF 1	1 OF 1	R	02	-