NOTE	SPECIFICATIONS
1	MALE CONNECTOR ACCORDING TO APTIV SPECIFICATIONS: 10007
2	MALE CONNECTOR ACCORDING TO: -TEMPERATURE CLASS TI -ENGINE VIBRATOR CLASS VI -SEALING CLASS O
3	USER'S MANUAL: PU003
4	DELIVERY CONNECTOR WEIGHT : SEE CHART
5	NO WAFER HINGE OR WAFER HINGE BROKEN ALLOWED
6	VISUAL DEFECTS ON NO FUNCTIONAL AREAS ALLOWED

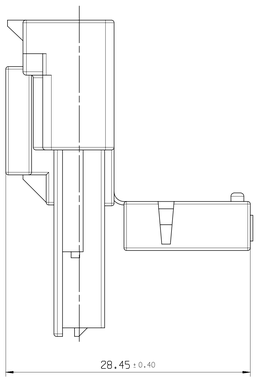

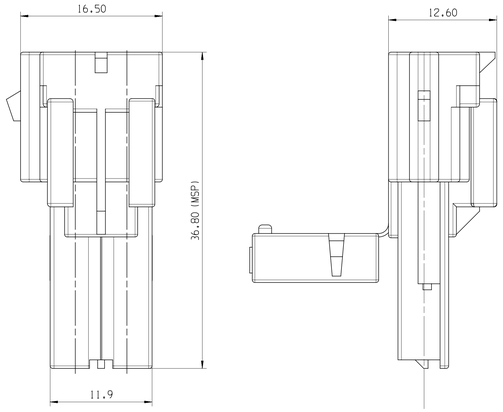

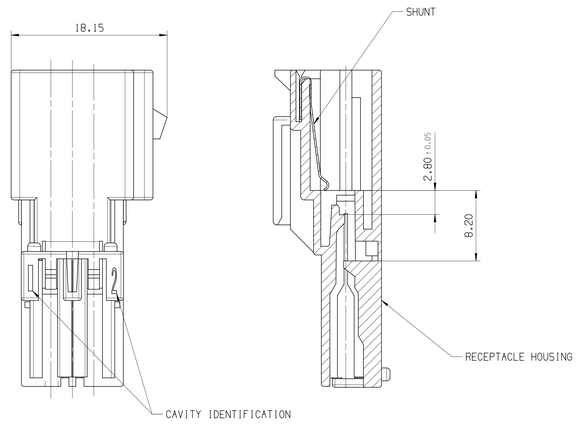

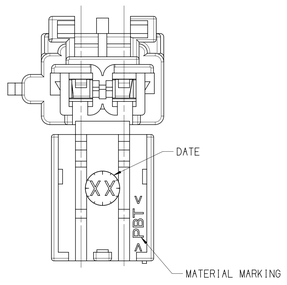

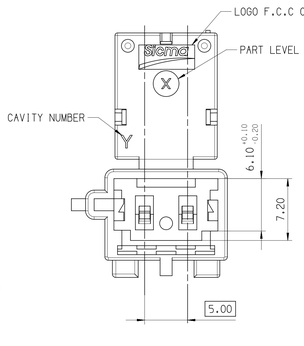

CODING	11.20 +0.05 -0.10	11.20 +0.05 -0.10	11.20 +0.05 -0.10	11.20 +0.05 -0.10
	1.00 +0.10	1.00 +0.10 1.35 +0.10	1.00 +0.10	1.00 +0.10 1.35 +0.10
	1.00 +0.10	2.50 11.20 +0.05 -0.10	1.00 +0.10 11.20 +0.05 -0.10	2.50 11.20 +0.05 -0.10
COLOR	BROWN	BLUE	GREEN	WHITE
MVL P/N	211 PL 02 2 S 1 010	211 PL 02 2 S 6 010	211 PL 02 2 S 5 010	211 PC 02 2 S 9 010
MVL PART REVISION	C	C	C	C
APTIV PART NUMBER	10763101	10763106	33500319	10811361

MALE TERMINAL	APTIV P/N	TYPE	RANGE	COATING	MATERIAL
211 CL 2 S 1230	10763712	1.5 X 0.8	1	Au	Cu Mg 1

DESCRIPTION	MVL P/N	APTIV P/N	MATERIAL	COLOR
SHUNT	211 C 120	33505913	Cu Mg 1	-
RECEPTACLE HOUSING	211 1 1 010	33505864	PBT NO FILLED	BROWN
	211 1 6 010	33505865		BLUE
	211 1 5 010	33505866		GREEN
	211 1 9 010	33505867		WHITE

A LINE DRAWN THROUGH A PART NUMBER INDICATES THAT PHYSICAL PARTS ARE NOT AVAILABLE FOR ORDERING.

PART NUMBERS THAT DO NOT HAVE A LINE PRESENT INDICATE THAT PHYSICAL PARTS ARE AVAILABLE FOR ORDERING.

CONTACT APTIV SALES TO ASSURE AVAILABILITY OF PARTS.

R 0.1 MAX
R 0.2 MAX
SHARP CORNER TOLERANCE

DIMENSIONAL RANGE (MM)										CHART E1
FROM	> 0	> 20	> 30	> 70	> 100	> 150	> 200	> 250	> 300	
TO	20	30	70	100	150	200	250	300	400	
TOLERANCE UNLESS OTHERWISE SPECIFIED										
	±0.15	±0.2	±0.3	±0.4	±0.5	±0.6	±0.8	±1	±1.2	
ANGULAR TOLERANCE ±2°										

DO NOT SCALE

USE MATH DATA

NX

REVISION HISTORY										
DWG STATUS						ZONE	REVISION HISTORY	AUTH	DR	APVD 1	APVD 2
DATE	STG	REV	N/P	CHG							
18JL22	R	01					INITIAL RELEASE		K.GOW	J.MOI	J.MOI

3D VIEW

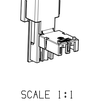

SCALE 1:1

DWG TYP: CUSTOMER PART DRAWING

WEIGHT (GR): 3.4

VOLUME (CM³): ---

ROUTING

DISTR CODE: D

UNLESS OTHERWISE SPECIFIED

GENERAL TOLERANCES ACCORDING TO: SEE CHART

GD&T ACCORDING TO: ISO 1101

REFERENCE

FIRST ANGLE PROJECTION

•APTIV•

CONNECTION SYSTEMS

Chennai, India

COPYRIGHT 2022 APTIV. ALL RIGHTS RESERVED.

THIS DRAWING IS THE PROPERTY OF APTIV AND CONTAINS APTIV CONFIDENTIAL INFORMATION. THE REPRODUCTION, DISTRIBUTION AND UTILIZATION OF THIS DOCUMENT OR ITS RELATED CAD MATH DATA, AS WELL AS COMMUNICATION OF ANY CONTENT TO OTHERS, WITHOUT EXPRESS AUTHORIZATION, IS PROHIBITED.

	DATE
DR K.GOWTHAM	18JL22
APVD1 J.MOINEAU	18JL22
APVD2 J.MOINEAU	18JL22
APVD3	
APVD4	
APVD5	

SUBSTANCES OF CONCERN AND RECYCLED CONTENT PER APTIV 0949001

MATERIAL: SEE CHART

DRAWING NAME: 2 WAY AIR-BAG MALE CONNECTOR

DRAWING NUMBER: 10831218

SIZE	SCALE	FRAME NO	SHEET NO	STG	REV	N/P
A0	4:1	1 OF 1	1 OF 1	R	01	

User: V.KOU
Path: \\apfs1.ldap.delphiauto.com\Users\vkou\Documents\Desktop\10831218_C1.CATDrawing
Date: 26-Jul-22 Time: 14:50:16