SYMBOL DEFINITION		
A DIMENSION WITHOUT AN INSPECTION REPORT SYMBOL ( ) DOES NOT REQUIRE INSPECTION. IT MAY BE CONTROLLED ON THE INDIVIDUAL COMPONENT DRAWING.	TOTAL NO OF INSPECTIONS REQUIRED	55
	LAST NO. USED	46

MISSING SYMBOLS	DWG STATUS					ZONE	REVISION HISTORY	AUTH	DR	APVD1	APVD2
NO MISSING SYMBOL NUMBER	DATE	STG	REV	N/P	CHG						
	30JN23	R	01	-	-		INITIAL RELEASE	449394	FCF	LXT	FCF

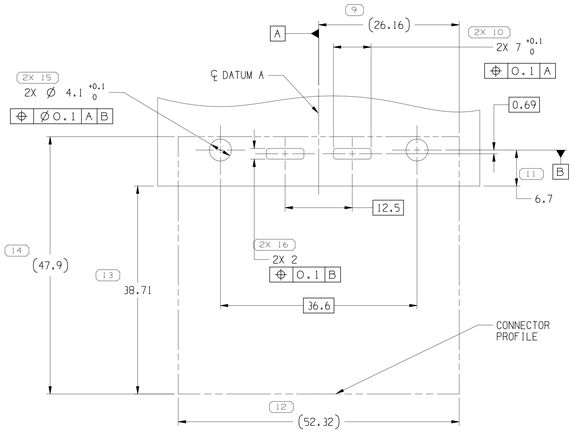

RECOMMENDED PRINT CIRCUIT BOARD LAYOUT
PCB THICKNESS 1.6mm, TOLEARNCE±0.05
COMPONENT SIDE

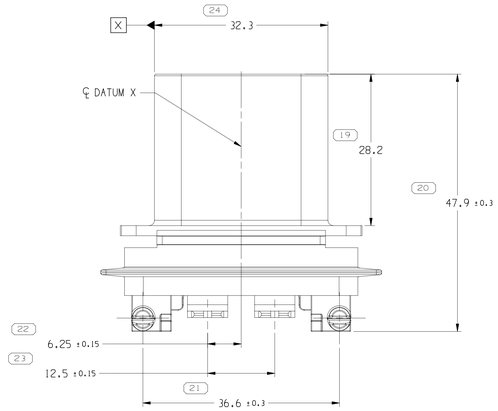

BOTTOM VIEW

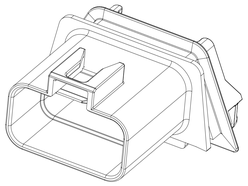

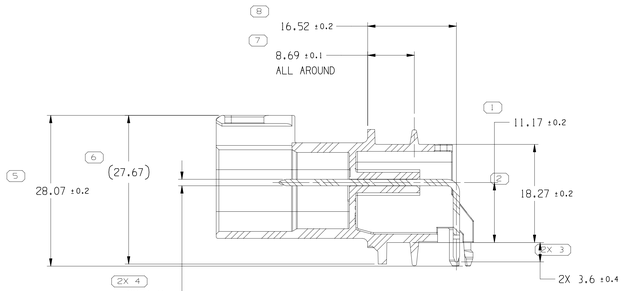

SECTION A-A

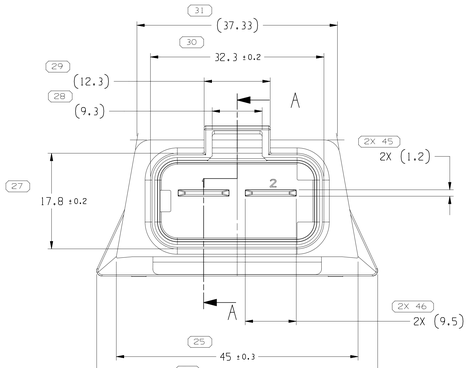

FRONT VIEW

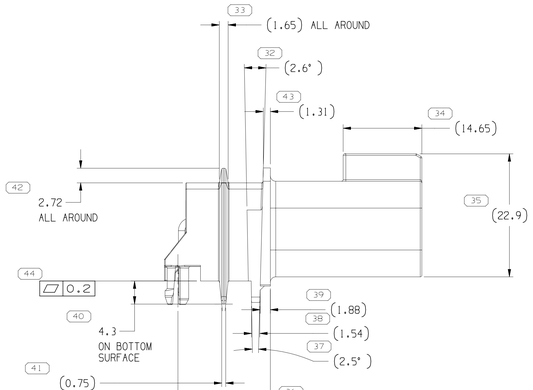

LEFT VIEW

NOTES

1. MATERIAL:
   HOUSING RESIN: PBT GF30, HB OR EQUIVALENT
   FLAMMABILITY, LIGHT GRAY(RAL7047)
   TERMINAL: COPPER ALLOY. MEET RoHS REQUIREMENT
2. PLATING: TIN OVER NICKEL
3. MISSING DIMENSIONS/UNDIMENSIONED DETAILS ACCORDING TO 3D-CAD-DATA.
4. MATING WITH APTIV FEMALE:33500397

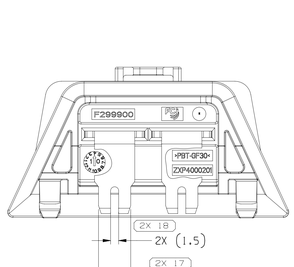

REAR VIEW

2W PIN HEADER W/T 9.5MM TERMINAL	33510634
DESCRIPTION	APTIV ASSEMBLY PART NUMBER

A ——— LINE DRAWN THROUGH A PART NUMBER INDICATES THAT PHYSICAL PARTS ARE NOT AVAILABLE FOR ORDERING.

PART NUMBERS THAT DO NOT HAVE A LINE PRESENT INDICATE THAT PHYSICAL PARTS ARE AVAILABLE FOR ORDERING.

CONTACT APTIV SALES TO ASSURE AVAILABILITY OF PARTS.

DWG TYPE: PART DRAWING

STYLE

VOLUME (CM³)

DISTR CODE

UNLESS OTHERWISE SPECIFIED
THIS DOCUMENT IS IN ACCORDANCE WITH ASME Y14.5M-1994 AS AMENDED BY THE GM GLOBAL DIMENSIONING AND TOLERANCING ADDENDUM 2001. SEPARATE PATTERNS OF FEATURES MAY BE GAGED SEPARATELY REGARDLESS OF DATUM REFERENCES.

ALL DIMENSIONS ARE IN MILLIMETERS

REFERENCE

(N/A) PROCESS SENSITIVE DIMENSION

DIMENSIONS ENCLOSED IN ( ) INDICATE REFERENCE DIMENSIONS AND NO TOLERANCE LIMITS ARE ESTABLISHED

DIMENS IONAL RANGE (MM)	0 TO 20	>20 30	>30 70	>70 100	>100	CHART E
TOLERANCE UNLESS OTHERWISE SPECIFIED	±0.15	±0.2	±0.3	±0.4	±0.5	

ANGULAR TOLERANCE ±2°

THIRD ANGLE PROJECTION

DO NOT SCALE
USE MATH DATA

NX

APTIV
CONNECTION SYSTEMS
Anting, China

COPYRIGHT 2023 APTIV. ALL RIGHTS RESERVED.

THIS DRAWING IS THE PROPERTY OF APTIV AND CONTAINS APTIV CONFIDENTIAL INFORMATION. THE REPRODUCTION, DISTRIBUTION AND UTILIZATION OF THIS DOCUMENT OR ITS RELATED CAD MATH DATA, AS WELL AS COMMUNICATION OF ANY CONTENT TO OTHERS, WITHOUT EXPRESS AUTHORIZATION, IS PROHIBITED.

		DATE
DR		
APVD1	CHAOFEI FANG	30JN23
APVD2	XINTIAN LI	30JN23
APVD3	CHAOFEI FANG	30JN23
APVD4		
APVD5		

SUBSTANCES OF CONCERN AND RECYCLED CONTENT PER APTIV [09490D]

MATERIAL: SEE NOTES

DRAWING NAME: ASM CONN 2 M 9.5 HEADER

DRAWING NUMBER: 33510634

SIZE	SCALE	FRAME NO	SHEET NO	STG	REV	N/P
A0		1 OF 2	1 OF 1	R	01	-

User: zdkcu
Part: 33510634-01R03-SolidCAD
Date: 29-Jul-23 Time: 11:37:41