SYMBOL DEFINITION		
A DIMENSION WITHOUT AN INSPECTION REPORT SYMBOL (2) DOES NOT REQUIRE INSPECTION. IT MAY BE CONTROLLED ON THE INDIVIDUAL COMPONENT DRAWING.	TOTAL NO OF INSPECTIONS REQUIRED	6
	LAST NO. USED	4

MISSING SYMBOLS
NO MISSING SYMBOL NUMBER

DWG STATUS									
ZONE	REVISION HISTORY	AUTH	DR	APVD 1	APVD 2
DATE	STG	REV	N/P	CHG					
08FE23	R	01	-	-		CREATED PART DRAWING	448871		SHR	ZL

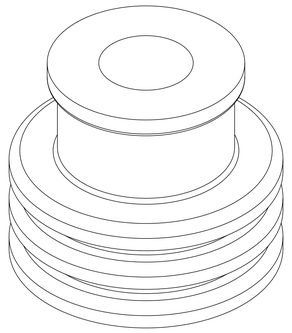

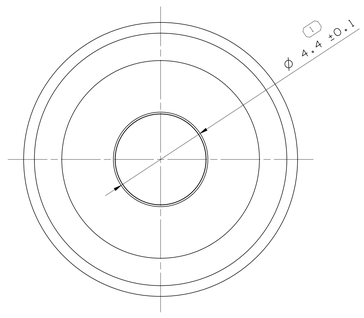

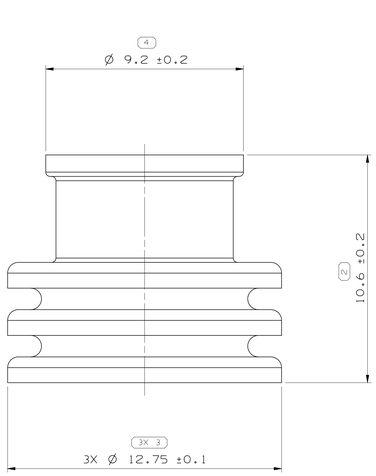

NOTES:

1. UNLESS OTHERWISE SPECIFIED AND/OR INDICATED:

   DIMENSIONS ARE TO FACE OF VIEW SHOWN AND AUTOMATICALLY ROUNDED BY COMPUTER FOR INSPECTION (SEE MATH MODEL FOR PRECISE DIMENSIONS). FOR ALL OTHER DIMENSIONS NOT SHOWN BUT REQUIRED FOR TOOL BUILD, SEE MATH MODEL FOR PRECISE TOOL PATH DATA. BURRS 0.05 MAX.

2. THIS PRODUCT IS NOT CATEGORIZED AS AN APPEARANCE ITEM, MINOR IMPERFECTIONS INCLUDING, BUT NOT LIMITED TO, FLOW MARKS, COLOR BLEMISHES, GATE VESTIGE, AND SOFT FLASH THAT DO NOT AFFECT THE FIT, FORM, OR FUNCTION OF THE PART ARE PERMISSIBLE PER EANP_4-3_CS_01_EN.
3. PART MUST BE MADE BY VERGIN MATERIAL ONLY.
4. THIS PART IS TYPICALLY USED IN PARTS ON DRAWING 35736894.
5. PARTS ARE TO BE PACKAGED IN SEALED BAG.
6. PARTS MUST BE HEATED MIN. 4 HOURS AT 200°C CHAMBER.

A ——— LINE DRAWN THROUGH A PART NUMBER INDICATES THAT PHYSICAL PARTS ARE NOT AVAILABLE FOR ORDERING.

PART NUMBERS THAT DO NOT HAVE A LINE PRESENT INDICATE THAT PHYSICAL PARTS ARE AVAILABLE FOR ORDERING.

CONTACT APTIV SALES TO ASSURE AVAILABILITY OF PARTS.

DWG TYPE: PART DRAWING

STYLE:

VOLUME (CM³): 0.698

DISTR CODE:

UNLESS OTHERWISE SPECIFIED

THIS DOCUMENT IS IN ACCORDANCE WITH ASME Y14.5M-1994 AS AMENDED BY THE GM GLOBAL DIMENSIONING AND TOLERANCING ADDENDUM 2001. SEPARATE PATTERNS OF FEATURES MAY BE GAGED SEPARATELY REGARDLESS OF DATUM REFERENCES.

ALL DIMENSIONS ARE IN MILLIMETERS

REFERENCE

(2) PROCESS SENSITIVE DIMENSION

DIMENSIONS ENCLOSED IN ( ) INDICATE REFERENCE DIMENSIONS AND NO TOLERANCE LIMITS ARE ESTABLISHED

DIMENSIONAL RANGE (MM)									CHART M
FROM	> 0	> 6	> 30	> 70	>120	>160	>200	>250	>315
TO	6	30	70	120	160	200	250	315	400
TOLERANCE UNLESS OTHERWISE SPECIFIED									
ANGULAR TOLERANCE ±1°	±0.1	±0.2	±0.3	±0.4	±0.45	±0.55	±0.7	±0.85	±1.05

THIRD ANGLE PROJECTION

DO NOT SCALE

USE MATH DATA

NX

•APTIV•

CONNECTION SYSTEMS

Chennai, India

COPYRIGHT 2023 APTIV, ALL RIGHTS RESERVED.

THIS DRAWING IS THE PROPERTY OF APTIV AND CONTAINS APTIV CONFIDENTIAL INFORMATION. THE REPRODUCTION, DISTRIBUTION AND UTILIZATION OF THIS DOCUMENT OR ITS RELATED CAD MATH DATA, AS WELL AS COMMUNICATION OF ANY CONTENT TO OTHERS, WITHOUT EXPRESS AUTHORIZATION, IS PROHIBITED.

	DATE
DR	
APVD1 HANIF ROSHAN	08FE23
APVD2 ZHIMIAO LIU	08FE23
APVD3 JONNY ZHENG	08FE23
APVD4	
APVD5	

SUBSTANCES OF CONCERN AND RECYCLED CONT|0949001|0949001|

MATERIAL: SILICONE, RED

DRAWING NAME: SEAL CBL IW

DRAWING NUMBER: 35748167

SIZE	SCALE	FRAME NO	SHEET NO	STG	REV	N/P
A0	10:1	1 OF 1	1 OF 1	R	01	-

User: C.Pink
Plot Date: 12-Jan-24 Time: 14:06:02
Plot Size: ISO A0
Plot Scale: 0.0001 x 0.0001 Inches
Plot Offset: 0.00, 0.00 Inches
Plot Rotation: 0.00 Degrees