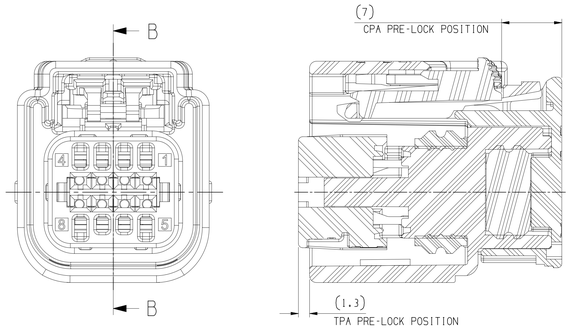

SECTION B-B

CPA & TPA IN PRE-LOCK POSITION

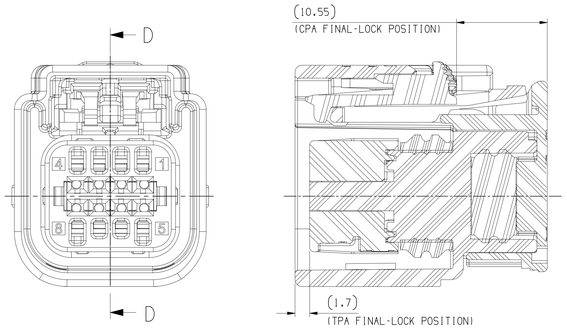

SECTION D-D

CPA & TPA IN FINAL-LOCK POSITION

SYMBOL DEFINITION		
A DIMENSION WITHOUT AN INSPECTION REPORT SYMBOL (OVAL) DOES NOT REQUIRE INSPECTION. IT MAY BE CONTROLLED ON THE INDIVIDUAL COMPONENT DRAWING.	TOTAL NO OF INSPECTIONS REQUIRED	8
	LAST NO. USED	7

MISSING SYMBOLS
NO MISSING SYMBOL NUMBER

DWG STATUS DATE	STG	REV	N/P	CHG	ZONE	REVISION HISTORY	AUTH	DR	APVD1	APVD2
12SE17	R	01	-	-		INITIAL RELEASE		BHC	SJW	PJH
15MR18	R	02	-	-		SERIAL RELEASE		BHC	SJW	PJH
17JA19	R	02	AA	-		ADD THE INFORMATION ABOUT COVER MODIFY THE APPLICABLE TERMINAL		KDH	SJW	PJH

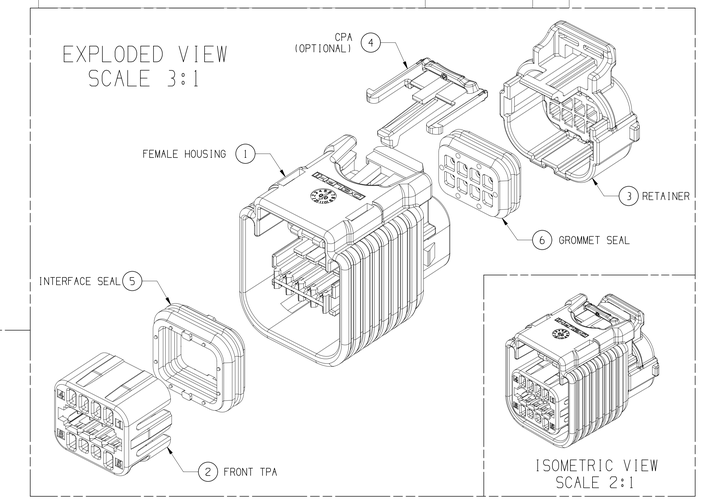

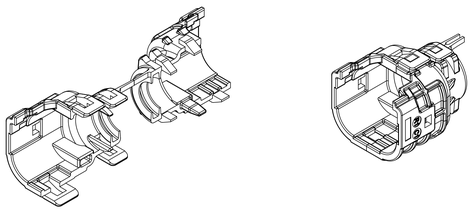

PART NUMBER	DESCRIPTION	COLOR
35166276	DRESS COVER	BLACK

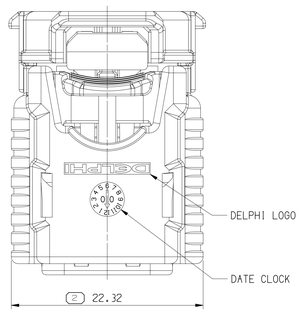

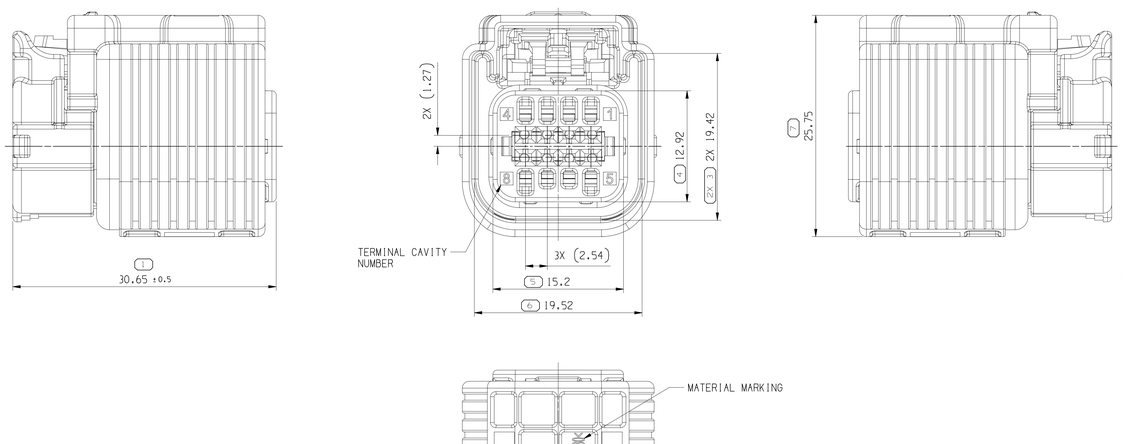

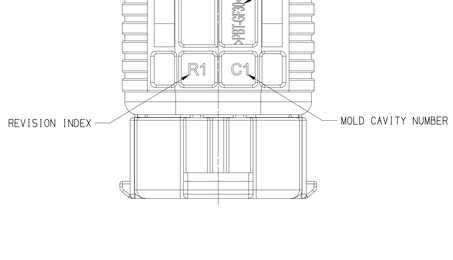

ASSOCIATED PARTS				
FEMALE TERMINAL		PART NUMBER	WIRE SIZE(mm²)	WIRE OVERALL DIAMETER
OCS 1.2	Sn PLATING	35072403	0.35-0.5	1.2-1.6
CAVITY PLUG		15404841	-	-

ASSEMBLY P/NO	REV.	REP.	DESCRIPTION	MATERIAL	COLOR	P/NO	REMARK
35128932	01	1	FEMALE HOUSING	PBT-GF30	BLACK	35128927	
		2	FRONT TPA	PBT-GF30	GRAY	35128929	
		3	RETAINER	PBT-GF30	BLACK	35128930	
		4	CPA	PA66-GF35	GRAY	35128931	OPTIONAL
		5	INTERFACE SEAL	SILICONE RUBBER	YELLOW	35195805	
		6	GROMMET SEAL	SILICONE RUBBER	GREEN	13567793	

NOTES:

1. TOLERANCE ON DIN ISO 2768 (m)
2. MUST BE FREE OF CRACK , FLOW MARK, FLASH, BURR ETC, THAT AFFECT FUNCTION OF PRODUCT
3. MUST MEET HMC SPEC ES91500-00 UNLESS OTHERWISE SPECIFIED TO VENDOR SPECIFICATION
4. APPLICABLE MALE INTERFACE DRAWING NO : 15438864 (USCAR-EWCAP 064-S-008-2-ZO1)
5. APPLICABLE DRESS COVER PART NO : 35166276

DIN ISO 2768	Tolerance Class medium (m)						
Linear Dimensions except for broken edges	Permissible deviations for basic size range (mm)						
	0.5 *) up to 3	over 3 up to 6	over 6 up to 30	over 30 up to 120	over 120 up to 400	over 400 up to 1000	over 1000 up to 2000
	±0.1	±0.1	±0.2	±0.3	±0.5	±0.8	±1.2
Broken edges (radii, chamfers)	Permissible deviations for basic size range (mm)						
	0.5 *) up to 3		over 3 up to 6		over 6		
	±0.2		±0.5		±1		
	Permissible deviations for ranges of lengths, in mm, of the shorter side of the angle concerned						
Angular dimensions	up to 10	over 10 up to 50	over 50 up to 120		over 120 up to 400		over 400
	±1°	±0° 30'	±0° 20'		±0° 10'		±0° 5'

*) For nominal sizes below 0.5mm, the deviations shall be indicated adjacent to the relevant nominal size(s).

DIMENSIONAL RANGE (MM) FROM / TO	> 0 / 20	> 20 / 30	> 30 / 70	> 70 / 100	> 100 / 150	> 150 / 200	> 200 / 250	> 250 / 300	> 300 / 400
TOLERANCE UNLESS OTHERWISE SPECIFIED	±0.15	±0.2	±0.3	±0.4	±0.5	±0.6	±0.8	±1	±1.2
ANGULAR TOLERANCE ±2°									

PROCESS SENSITIVE DIMENSION

DIMENSIONS ENCLOSED IN ( ) INDICATE REFERENCE DIMENSIONS AND NO TOLERANCE LIMITS ARE ESTABLISHED

THIRD ANGLE PROJECTION

DO NOT SCALE

USE MATH DATA

NX

A ~~LINE~~ LINE DRAWN THROUGH A PART NUMBER INDICATES THAT PHYSICAL PARTS ARE NOT AVAILABLE FOR ORDERING.

PART NUMBERS THAT DO NOT HAVE A LINE PRESENT INDICATE THAT PHYSICAL PARTS ARE AVAILABLE FOR ORDERING.

CONTACT APTIV SALES TO ASSURE AVAILABILITY

DWG TYPE: PART DRAWING

STYLE

VOLUME (CM³): -

DISTR CODE

UNLESS OTHERWISE SPECIFIED

THIS DOCUMENT IS IN ACCORDANCE WITH ASME Y14.5M-1994 AS AMENDED BY THE GM GLOBAL DIMENSIONING AND TOLERANCING ADDENDUM-2001. SEPARATE PATTERNS OF FEATURES MAY BE OASED SEPARATELY REGARDLESS OF DATUM REFERENCES.

ALL DIMENSIONS ARE IN MILLIMETERS

REFERENCE

•APTIV•
DELPHI PACKARD ELECTRICAL/ELECTRONIC ARCHITECTURE
Chennai, India
COPYRIGHT 2017 DELPHI CORPORATION AND/OR ITS AFFILIATES. ALL RIGHTS RESERVED.
THIS DRAWING IS THE PROPERTY OF DELPHI CORPORATION AND CONTAINS DELPHI CONFIDENTIAL INFORMATION. THE REPRODUCTION, DISTRIBUTION AND UTILIZATION OF THIS DOCUMENT OR ITS RELATED CAD MATH DATA, AS WELL AS COMMUNICATION OF ANY CONTENT TO OTHERS, WITHOUT EXPRESS AUTHORIZATION, IS PROHIBITED.

	DATE
DR	
APVD1 BAEK,HYUN-CHUL	12SE17
APVD2 SEO,JU-WON	12SE17
APVD3 PARK,JOO-HYUN	12SE17
APVD4	
APVD5	

SUBSTANCES OF CONCERN AND RECYCLED CONTENT PER DELPHI 10749001

MATERIAL: SEE TABLE

DRAWING NAME: ASM CONN 8 F OCS 1.2 BLK SLD

DRAWING NUMBER: 35130219

SIZE	SCALE	FRAME NO	SHEET NO	STG	REV	N/P
A0	5:1	1 OF 1	1 OF 1	R	02	AA

Users: D_PDB
Plots: 35130219_DRW1.dwg
Date: 15-Sep-20 Time: 10:29:34