SYMBOL DEFINITION		
A DIMENSION WITHOUT AN INSPECTION REPORT SYMBOL ⬭ DOES NOT REQUIRE INSPECTION. IT MAY BE CONTROLLED ON THE INDIVIDUAL COMPONENT DRAWING.	TOTAL NO OF INSPECTIONS REQUIRED	151
	LAST NO. USED	38

MISSING SYMBOLS
37-38

DWG STATUS DATE	STG	REV	N/P	CHG	ZONE	REVISION HISTORY	AUTH	DR	APVD 1	APVD 2
28NO16	R	01	-	-		ALL PARTS - RELEASED PART DRAWING	434558	CGD	ESC	RLG
22AU17	R	02	-	-		ALL PARTS - DIM 28 WAS 2X(41.22) AND REVISED "ACCEPTS COMPONENTS" NOTE	437552	GDH	JVM	CEL
26OC17	R	03	-	-		ALL PARTS - (28.41) WAS 28.41±0.125, 28.6+0.175/-0.125 WAS 28.6±0.125, 30.9+0.37/0.1 WAS 30.9+0.05/0.1 AND UPDATED PART AVAILABILITY	438222	CGD	CGD	CEL
08NO17	R	04	-	-		ALL PARTS -28.3+0.1/-0.25 WAS 28.3±0.125	438356	CGD	CGD	CEL
29AU18	R	05	-	-		35014011 & 35014012 - ADDED DIM #36; 35254657 & 35254658 - RELEASED	440827	JGM	JGM	KST
05OC18	R	06	-	-		35254657 & 35254658 - OBSOLETE; ALL PARTS - ADDED STATUS COLUMN IN CHART	441147	SM	RRR	KST

TYPE 102
SAME AS TYPE 101
EXCEPT AS SHOWN

DETAIL Y
SCALE 20:1

AUXILIAR FRONT VIEW

SECTION B-B

DETAIL W
SCALE 10:1

DETAIL V
SCALE 10:1

SECTION D-D

TYPE 101

DETAIL U
SCALE 5:1

DETAIL T
SCALE 5:1

SECTION C-C

(1)X(0.1) RAISED CHARACTERS AS SHOWN.

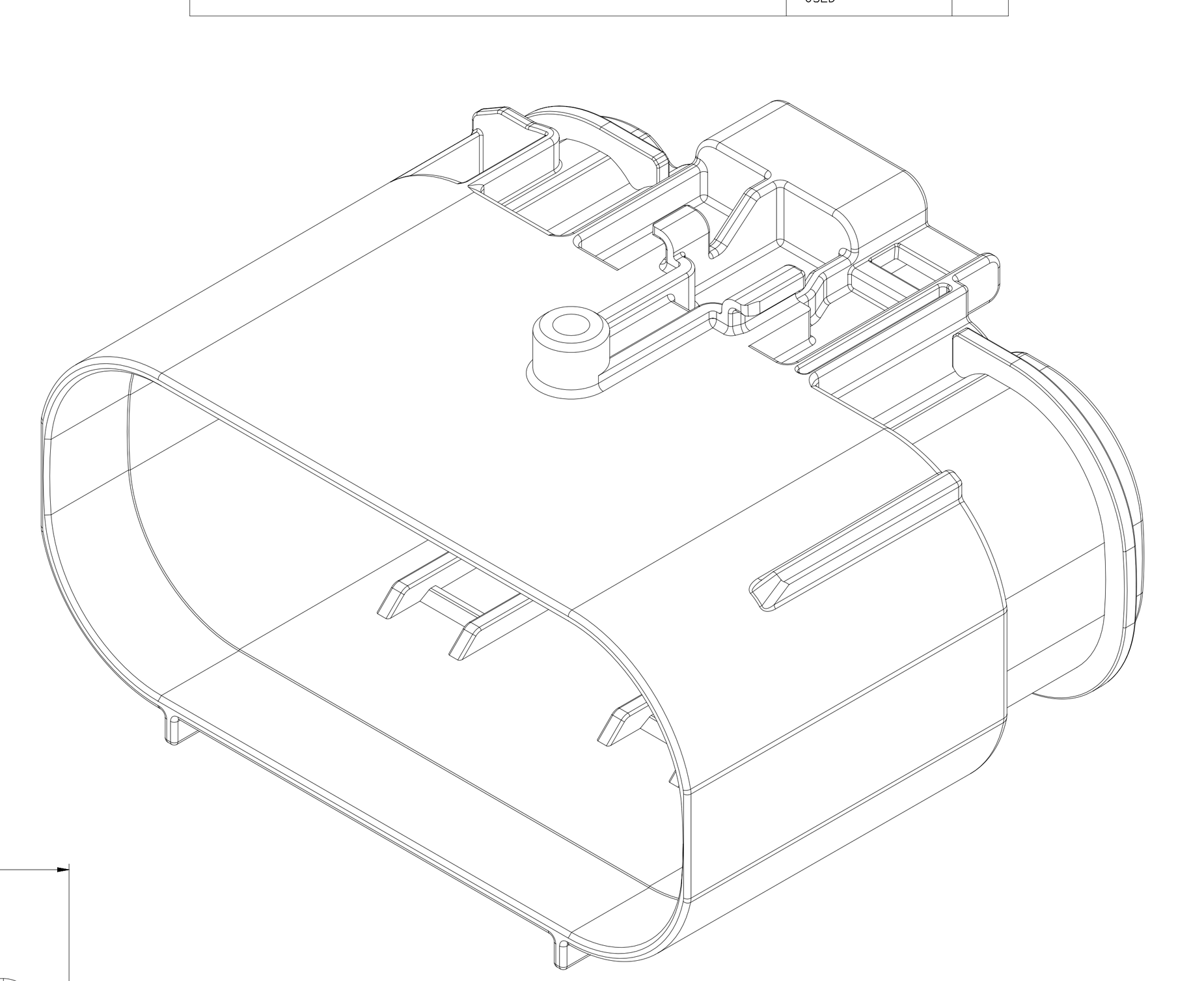

NOTES

1. UNLESS OTHERWISE SPECIFIED AND/OR INDICATED:

   DIMENSIONS ARE TO FACE OF VIEW SHOWN AND AUTOMATICALLY ROUNDED BY COMPUTER FOR INSPECTION (SEE MATH MODEL FOR PRECISE DIMENSIONS). FOR ALL OTHER DIMENSIONS NOT SHOWN BUT REQUIRED FOR TOOL BUILD, SEE MATH MODEL FOR PRECISE TOOL PATH DATA.

2. THIS PRODUCT IS NOT CATEGORIZED AS AN APPEARANCE ITEM, MINOR IMPERFECTIONS INCLUDING, BUT NOT LIMITED TO, FLOW MARKS, COLOR BLEMISHES, GATE VESTIGE, AND SOFT FLASH THAT DO NOT AFFECT THE FIT, FORM, OR FUNCTION OF THE PART ARE PERMISSIBLE PER EANP_4-3_CS_01_EN.

3. PARTS SHOWN ON THIS DRAWING USED IN ASSEMBLIES SHOWN ON TAXI 35016651.

4. MATERIAL RECYCLING CODE PER ISO 11469. (1)X(0.1) CHARACTERS AS SHOWN TO BE LOCATED ON ANY EXTERIOR SURFACE.

5. THIS PART ACCEPTS THE FOLLOWING COMPONENTS OR EQUIVALENT:

   35014044 - CAVITY INSERT
   35014034 - LOCK SECONDARY
   35014045 - COV TERM STABILIZER
   35014037 - COV STRAIN RLF
   35056882 - STRAIGHT COVER
   35029261 - RIGHT ANGLE DRESS COVER (19MM)
   35029262 - RIGHT ANGLE DRESS COVER (22MM & 25MM)
   35014046 - MATT SEAL

6. CORPORATE BRAND TO BE APPLIED TO PRODUCT DESIGN PER THE LATEST REVISION OF ESD 51085201.

PART NO	REV	N/P	STATUS	TYPE	MATERIAL SPECIFICATION AND COLOR	VOLUME (CM³)
35254658	01	AA	OBSOLETE	104	POLYESTER COMPOUND GRAY	22.408
35254657	01	AA	OBSOLETE	103	POLYESTER COMPOUND BLACK	22.399
35014012	02	AC	-	102	POLYESTER COMPOUND GRAY	22.108
35014011	02	AC	-	101	POLYESTER COMPOUND BLACK	22.098

DIMENSIONAL RANGE (MM) FROM / TO	>0 / 20	>20 / 30	>30 / 70	>70 / 100	>100 / 150	>150 / 200	>200 / 250	>250 / 300	>300 / 400
TOLERANCE UNLESS OTHERWISE SPECIFIED (CHART E1)	±0.15	±0.2	±0.3	±0.4	±0.5	±0.6	±0.8	±1	±1.2

ANGULAR TOLERANCE ±2°

(2) PROCESS SENSITIVE DIMENSION

DIMENSIONS ENCLOSED IN ( ) INDICATE REFERENCE DIMENSIONS AND NO TOLERANCE LIMITS ARE ESTABLISHED.

A LINE DRAWN THROUGH A PART NUMBER INDICATES THAT PHYSICAL PARTS ARE NOT AVAILABLE FOR ORDERING.

PART NUMBERS THAT DO NOT HAVE A LINE PRESENT INDICATE THAT PHYSICAL PARTS ARE AVAILABLE FOR ORDERING.

CONTACT APTIV SALES TO ASSURE AVAILABILITY OF PARTS.

DWG TYPE: PART DRAWING

STYLE

VOLUME (CM³) | DISTR CODE: D

UNLESS OTHERWISE SPECIFIED

THIS DOCUMENT IS IN ACCORDANCE WITH ASME Y14.5M-1994 AS AMENDED BY THE GM GLOBAL DIMENSIONING AND TOLERANCING ADDENDUM-2001. SEPARATE PATTERNS OF FEATURES MAY BE GAGED SEPARATELY REGARDLESS OF DATUM REFERENCES.

ALL DIMENSIONS ARE IN MILLIMETERS

REFERENCE

THIRD ANGLE PROJECTION | DO NOT SCALE | USE MATH DATA | CAD | NX

•APTIV•

CONNECTION SYSTEMS
WARREN, OH

COPYRIGHT 2016 APTIV. ALL RIGHTS RESERVED.

THIS DRAWING IS THE PROPERTY OF APTIV AND CONTAINS APTIV CONFIDENTIAL INFORMATION. THE REPRODUCTION, DISTRIBUTION AND UTILIZATION OF THIS DOCUMENT OR ITS RELATED CAD MATH DATA, AS WELL AS COMMUNICATION OF ANY CONTENT TO OTHERS, WITHOUT EXPRESS AUTHORIZATION, IS PROHIBITED.

		DATE
DR		
APVD1	CARLOS DELGADILLO	28NO16
APVD2	EDUARDO SENA	28NO16
APVD3	RAFAEL LOPEZ	28NO16
APVD4		
APVD5		

SUBSTANCES OF CONCERN AND RECYCLED CONTENT PER APTIV 10949001

MATERIAL: SEE CHART

DRAWING NAME: TAXI CONN 55 M OCS 1.2 TAB 2.8 5.8 SLD

DRAWING NUMBER: 35014010

SIZE	SCALE	FRAME NO	SHEET NO	STG	REV	N/P
A1x6	4:1	1 OF 1	1 OF 1	R	06	-

DRAWING NUMBER: 35014010

SIZE	SCALE	FRAME NO	SHEET NO	STG	REV	N/P
A1x6	4:1	2 OF 3	1 OF 1	R	06	-

DRAWING NUMBER: 35014010

SIZE	SCALE	FRAME NO	SHEET NO	STG	REV	N/P
A1x6	4:1	3 OF 3	1 OF 1	R	06	-

35014010