

SCALE 1:1

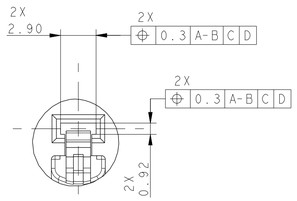

DETAIL Z
SCALE 4:1
DETAIL ALVEOLE 2.8mm
2.8mm DETAIL CAVITY

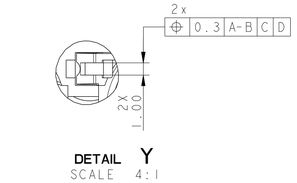

DETAIL Y
SCALE 4:1
DETAIL ALVEOLE DCS 1.5
DCS 1.5 DETAIL CAVITY

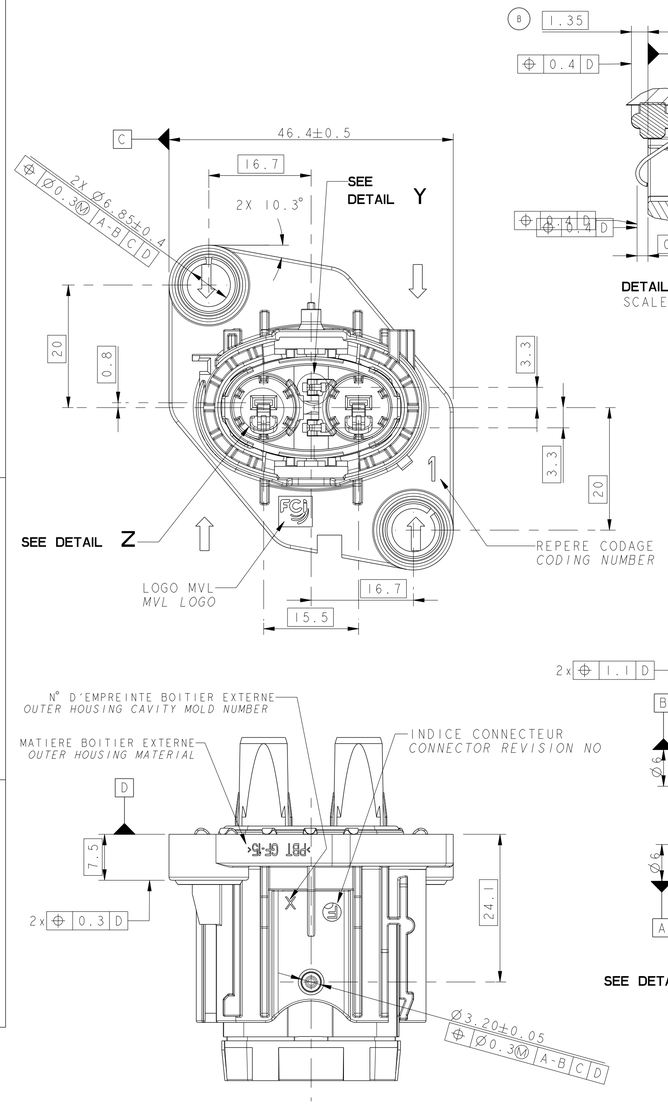

SECTION **A-A**

PRODUITS ASSOCIES (POUR INFORMATION) / *ASSOCIATED PARTS (FOR INFORMATION)*							
	REFERENCE MVL *MVL PART-N°*	REFERENCE DELPHI *DELPHI PART-N°*	SECTION DU FIL *WIRE SECTION*	DIAMETRE EXTERNE DU FIL *EXTERNAL WIRE DIAMETER*	JUF / SWS		
					REFERENCE MVL *MVL PART-N°*	REFERENCE DELPHI *DELPHI PART-N°*	COULEUR *COLOR*
LANGUETTE APEX 2.8 ETAME *TINNED APEX 2.8 MALE TERMINAL*	54001027	15516298	4mm²	Ø3.4 MINI - 3.7 MAXI	C302400	PE246910	ROUGE *REDDISH BROWN*
LANGUETTE DCS2 1.5 DORE *GOLD DCS2 1.5 MALE TERMINAL*	60100714	PE211635	0.35mm²	Ø1.25 MINI - 1.35 MAXI	6 099 39 13	15441379	ROUGE / *RED*
	60100734	10779703	0.5mm²	Ø1.4 MINI - 1.5 MAXI			
			1.0mm²	Ø1.75 MINI - 1.9 MAXI	6 099 39 28	15441380	GRIS / *GREY*
PORTE-CLIPS 2V APEX280 CODE1 *2W APEX280 CODE1 FEMALE CONNECTOR*	F886700						
PORTE-CLIPS 2V APEX280 CODE2 *2W APEX280 CODE2 FEMALE CONNECTOR*	F986700						
PORTE-CLIPS 2V APEX280 CODE3 *2W APEX280 CODE3 FEMALE CONNECTOR*	-						

CODAGE / KEY			
REFERENCE DELPHI / *DELPHI PART-N°*	33511748 REVISION 01	33511749 REVISION 01	-
REFERENCE MVL / *MVL PART-N°*	F586700 REVISION F	F686700 REVISION F	-
CODAGE MECANIQUE *MECHANICAL KEY*	CODAGE 1 *KEY 1*	CODAGE 2 *KEY 2*	CODAGE 3 *KEY 3*
REFERENCE BOITIER EXTERNE / *OUTER HOUSING PART-N°*	C348400	C448400	-
CODAGE CONNECTEUR SUIVANT VUE DE FACE PLUG CODING *FOLLOWING FRONT VIEW*	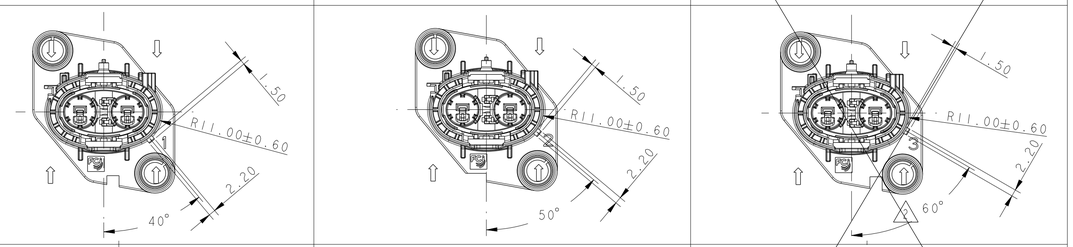		
CODAGE EQUIPEMENT SUIVANT VUE DE FACE DEVICE CODING *FOLLOWING FRONT VIEW*	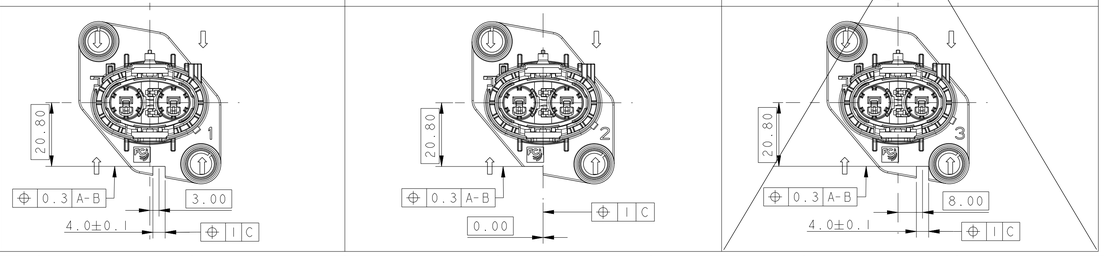		

NOTAS :
1 - CAHIER DES CHARGES MVL : FE PS 10 006
- CLASSE DE TEMPERATURE DU CONNECTEUR : CLASS 3 (-40°C ; +125°C)
- CLASSE DE VIBRATION : - PRECONDITIONNEMENT
- VIBRATION 3x 16H (COMBINE AVEC TEMPERATURE -40°C / +125°C) ; 3.9g
- CLASSE D'ETANCHEITE : 1000mb INITIAL, 500mb APRES LES TESTS D'ENVIRONNEMENT.
- EFFORT D'ACCOUPLEMENT : F<60N

2 - CONDITIONNEMENT : FE PA 08 007
3 - DOSSIER DE MISE EN OEUVRE : PUI39
4 - MASSE DU PRODUIT : 0.037 kg ±10%
5 - CE PLAN EST UN EXTRAIT DES PLANS DE DEFINITIONS. ON FERA REFERENCE POUR TOUT LITIGE AUX PLANS DE DEFINITION.
6 - PLAN DU PORTE-CLIPS: PCC0686507
7 - LE COUPLE DE SERRAGE PRECONISE PARTICIPE A UNE FONCTION SECURITAIRE D'ETANCHEITE.

NOTES :
1 - MVL SPECIFICATIONS : FE PS 10 006
- TEMPERATURE CLASS OF THE CONNECTOR : CLASS 3 (-40°C ; +125°C)
- VIBRATION CLASS : - PRECONDITIONNING
- VIBRATION 3x 16H (COMBINED WITH TEMPERATURE -40°C / +125°C) ; 3.9g
- SEALING CLASS : 1000mb INITIAL, 500mb AFTER TEST ENVIRONNEMENT.
- MATING FORCE : F<60N
2 - PACKAGING : FE PA 08 007
3 - HANDLING MANUAL : PUI39
4 - MASS OF THE PRODUCT : 0.037 kg ±10%
5 - THIS DRAWING IS AN EXTRACT OF THE DETAIL DRAWINGS. IN CASE OF CONFLICT REFER TO THEM.
6 - DRAWING FEMALE CONNECTOR: PCC0686507
7 - THE PRECONIZED SCREWING TORQUE PARTICIPATE TO A SECURITARY SEALING FEATURE.

ECN-NO. *NUMERO ECN*	POSITION *POSITION*	CHANGE DESCRIPTION *MODIFICATION*
	-	-
	-	-
	-	-
	-	-
	-	-
	-	-
	-	-
	-	DELPHI P/N ADDED

PRODUCT SPEC. *SPECIF. PRODUIT*: SEE NOTES
PACKAGING SPEC. *SPECIF. EMBALLAGE*: SEE NOTES
APPLICATION SPEC. *SPECIF. APPLICATION*: SEE NOTES

COPYRIGHT DELPHI CORPORATION AND/OR ITS AFFILIATES. ALL RIGHTS RESERVED. REVISED
THIS DRAWING IS THE PROPERTY OF DELPHI CORPORATION AND CONTAINS DELPHI CONFIDENTIAL INFORMATION. THE REPRODUCTION, DISTRIBUTION AND UTILIZATION OF THIS DOCUMENT OR ITS RELATED CAD DATA (E.G., AS WELL AS COMMUNICATION OF ANY CONTENT TO OTHERS, WITHOUT EXPRESS AUTHORIZATION, IS PROHIBITED.
CE PLAN EST LA PROPRIETE DE DELPHI CORPORATION ET CONTIENT DES INFORMATIONS DELPHI CONFIDENTIELLES. LA REPRODUCTION, LA DISTRIBUTION ET L'UTILISATION DE CE DOCUMENT OU DES DONNEES INTERNETIQUES CAO, AINSI QUE LA COMMUNICATION DE SON CONTENU A AUTRUI, SANS AUTORISATION EXPRESSE, EST INTERDITE.

TOLERANCES *TOLERANCES*: ±0.2 ±2°
COUNTERPART N° *CONTRE PARTIE N°*: SEE NOTE 6
DO NOT MEASURE DRAWING *NE PAS PRENDRE DE COTES*
MATERIAL : *MATIERE* : SEE BOM
COLOUR : *COULEUR* : SEE BOM
TOOL NO. *OUTIL N°* : -
ECO Loc. Code *CODE B.E.* : FE
SURFACE FINISH *ETAT DE SURFACE* : -

DELPHI PACKARD ELECTRICAL/ELECTRONIC ARCHITECTURE
EPERNON, FRANCE
ISO PROJECTION *PROJECTION ISO*
DIMENSION IN MILLIMETERS *DIMENSIONS EN MILLIMETRES*
CAD SYSTEM / FORMAT: pro / eng. A1

	DATE	NAME *NOM*
CREATED BY *CREE PAR*	2010/04/06	Gilles SCHMITT
MODIFIED BY *MODIF. PAR*	2013/05/15	F.FAURIE
CHECKED BY *VERIF. PAR*	2013/06/06	S.LACOTE
APPROVED BY *APPR. PAR*	2013/06/20	Pascal MENARD

FILE NAME *NOM DE FICHIER*: PCC0686506
DOCUMENT UNDER PDS CONTROL *DOCUMENT GERE SOUS P.D.S.* NO MODIFICATION ALLOWED OUTSIDE *PAS DE MODIFICATION EN DEHORS*

TITLE *DESIGNATION*: 2W APEX280 HEADER
PROJECT *PROJET*: 2X APEX280 POWER CONNECTOR
ESR NO. *NUMERO ESR*: EU-090006
CAT. NO. *NUMERO CAT.*: -

DRAWING NUMBER *REF. PLAN*: PCC0686506
REV. *IND.*: B
STATE *ETAT*: SERIAL RELEASED
PART NUMBER *REF. ARTICLE*: See Table
REV. *IND.*: -
APPROVAL LEVEL *NIV. D'APPROBATION*: 2
SHEET *FEUILLE*: 1 of 1, 1AP
SCALE *ECH.*: 1:1

EUR C04 112 F29

ENCOMBREMENT POUR MONTABILITE DU PORTE-CLIPS SUR EMBASE
FREE SPACE AREA NEEDED TO MATE AND UNMATE THE FEMALE CONNECTOR ON THE HEADER

2x VIS H M6 , CLASSE 8.8 SUIVANT NORME E25-30
2x SCREWS H M6 , 8.8 CLASS FOLLOWING NORM E25-30
COUPLE SERRAGE : 8Nm ±10%
SCREWING TORQUE : 8Nm ±10%
(VOIR NOTE 7 EN PAGE 1 / *SEE NOTE 7 ON PAGE 1*)

ET / AND

2x RONDELLES PLATES: Z 6 U SUIVANT NFE 27-611
2x WASHER: Z 6 U FOLLOWING NFE 27-611

OU / OR

2x VIS M6 TETE HEXAGONAL TYPE 1 SUIVANT NES 2114_2006_N1
2x SCREWS M6 HEXAGONAL HEAD TYPE 1 FOLLOWING NES 2114_2006_N1
COUPLE DE SERRAGE : 8Nm±10%
SCREWING TORQUE : 8Nm±10%
(VOIR NOTE 7 EN PAGE 1 / *SEE NOTE 7 ON PAGE 1*)

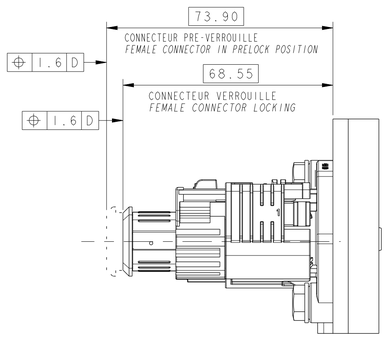

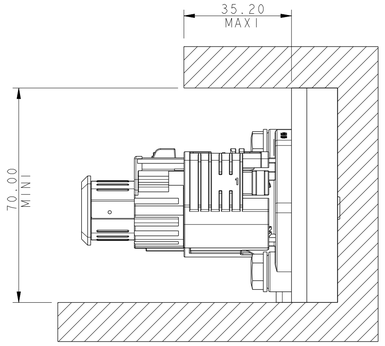

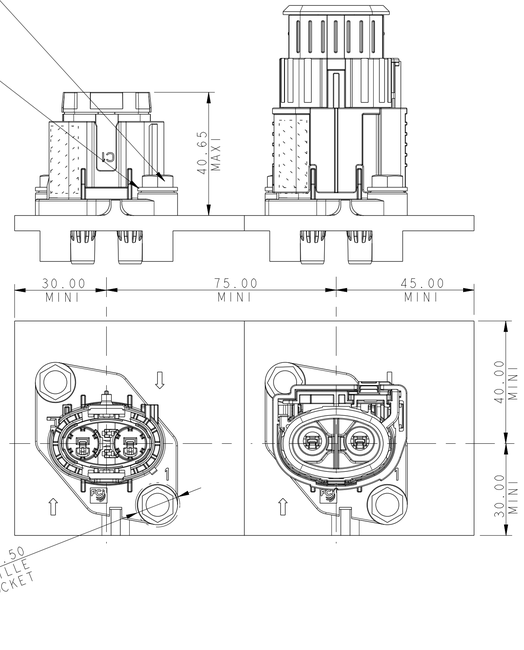

TABLEAU DES COMPOSANTS CONSTITUANT LE PRODUIT
COMPONENTS TABLE CONSTITUTING THE PRODUCT

REPERE *MARK*	DESIGNATION *TITLE*	COULEUR *COLOR*	MATIERE *MATERIAL*	QUANTITE *QUANTITY*
1	BOITIER EXTERNE *OUTER HOUSING*	ORANGE *ORANGE*	PBT 15% FV *PBT GF 15*	1
2	MODULE *INNER HOUSING*	ORANGE *ORANGE*	PBT 15% FV *PBT GF 15*	1
3	BLINDAGE *SHIELD*	-	ALLIAGE DE CUIVRE *COPPER ALLOY*	2
4	JOINT PLAT *FLAT SEAL*	GRIS *GREY*	SILICONE LSR *LSR SILICON*	1
5	INSERT METALLIQUE *METALIC INSERT*	-	ACIER *CARBON STEEL*	2

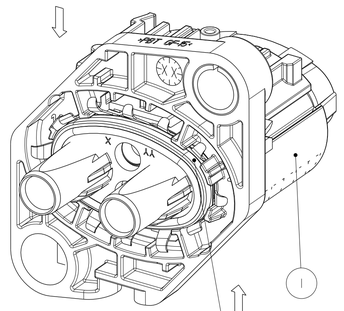

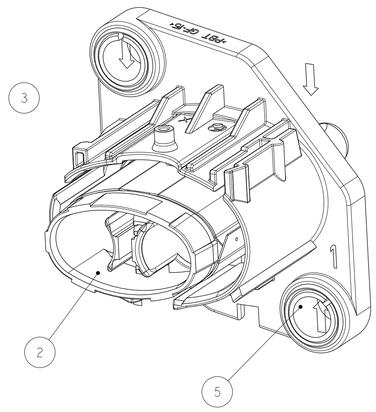

DEFINITION DE L'INTERFACE POUR MONTAGE EMBASE
DEFINITION OF THE INTERFACE TO ASSEMBLE THE HEADER

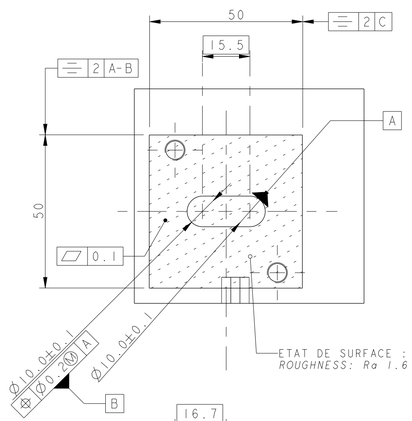

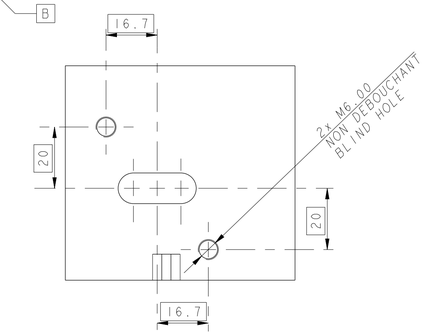

NOTES:
LA REFERENCE C EST DEFINIE AU MILIEU DU SEGMENT [AB] NORMAL A [A-B]
THE REFERENCE C IS DEFINED IN THE MIDDLE OF SEGMENT [AB] NORMAL TO THE REFERENCE [A-B]

MATIERE : ALLIAGE D'ALUMINIUM
MATERIAL : ALUMINIUM ALLOY

	CODAGE 1 KEY 1	CODAGE 2 KEY 2	CODAGE 3 KEY 3
CAS N°1 : CODAGE AVEC UNE GOUPILLE RAPPORTEE *USE CASE N°1 : CODING WITH A PIN*	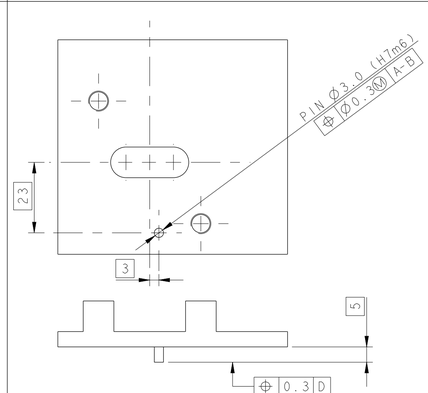 ATTENTION : TROU RECEVANT LA GOUPILLE NON DEBOUCHANT *WARNING : BLIND HOLE TO RECEIVE THE PIN*	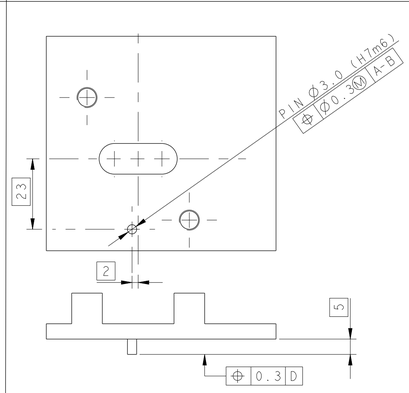 ATTENTION : TROU RECEVANT LA GOUPILLE NON DEBOUCHANT *WARNING : BLIND HOLE TO RECEIVE THE PIN*	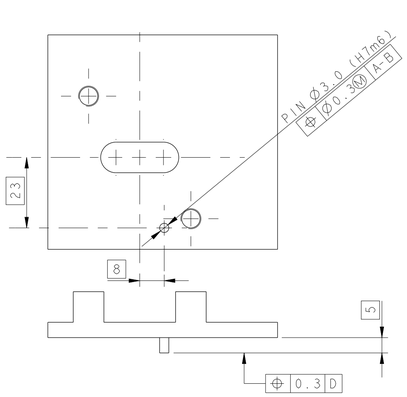 ATTENTION : TROU RECEVANT LA GOUPILLE NON DEBOUCHANT *WARNING : BLIND HOLE TO RECEIVE THE PIN*
CAS N°2 : CODAGE DANS LE MOULE *USE CASE N°2 : CODING INTO THE DIE CAST*	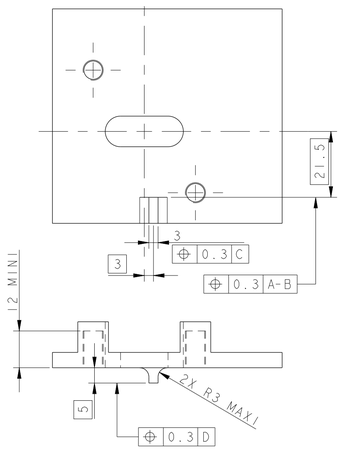	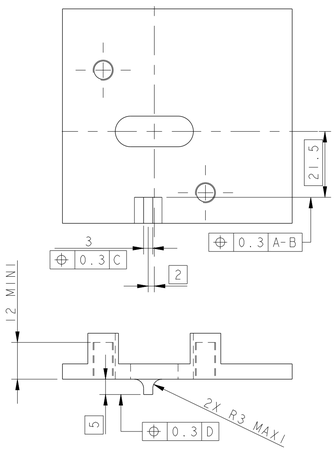	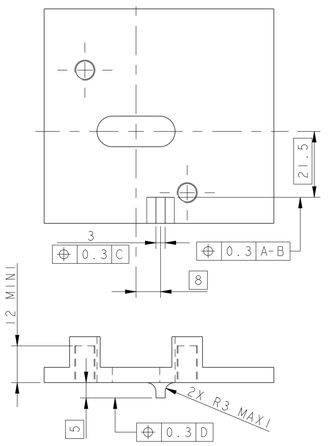

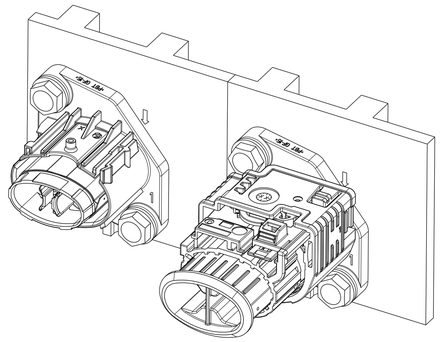

ECN-NO. NUMERO ECN	POSITION POSITION	CHANGE DESCRIPTION MODIFICATION
-	-	-
-	-	-
-	-	-
-	-	-
-	-	-
-	-	-
-	-	-
-	-	DELPHI P/N ADDED

PRODUCT SPEC. SPECIF. PRODUIT: SEE NOTES
PACKAGING SPEC. SPECIF. EMBALLAGE: SEE NOTES
APPLICATION SPEC. SPECIF. APPLICATION: SEE NOTES

COPYRIGHT DELPHI CORPORATION AND/OR ITS AFFILIATES. ALL RIGHTS RESERVED. REVISED
THIS DRAWING IS THE PROPERTY OF DELPHI CORPORATION AND CONTAINS DELPHI CONFIDENTIAL INFORMATION. THE REPRODUCTION, DISTRIBUTION AND UTILIZATION OF THIS DOCUMENT OR ITS RELATED CAD WITH DATA, AS WELL AS COMMUNICATION OF ANY CONTENT TO OTHERS, WITHOUT EXPRESS AUTHORIZATION, IS PROHIBITED.
CE PLAN EST LA PROPRIETE DE DELPHI CORPORATION ET CONTIENT DES INFORMATIONS DELPHI CONFIDENTIELLES. LA REPRODUCTION, LA DISTRIBUTION ET L'UTILISATION DE CE DOCUMENT OU DE SES DONNEES INTERNITIATIVES CAO, AINSI QUE LA COMMUNICATION DE TOUT CONTENU A AUTRUI, SANS AUTORISATION EXPRESSE, EST INTERDITE.

TOLERANCES *TOLERANCES*: ±0.2 ±2°
MATERIAL : *MATIERE* : SEE BOM
SURFACE FINISH *ETAT DE SURFACE*: -
COUNTERPART N° *CONTRE PARTIE N°*: SEE NOTE 6
COLOUR : *COULEUR* : SEE BOM
DO NOT MEASURE DRAWING *NE PAS PRENDRE DE COTES*
TOOL NO. *OUTIL N°*: -
ECO Loc. Code *CODE E.C.*: FE

DELPHI PACKARD ELECTRICAL/ELECTRONIC ARCHITECTURE
EPERNON, FRANCE

ISO PROJECTION *PROJECTION ISO* | DIMENSION IN MILLIMETERS *DIMENSIONS EN MILLIMETRES*

CAD SYSTEM: pro / eng.
DWG SIZE / FORMAT: A1

	NAME NOM	DATE DATE
CREATED BY *CREE PAR*	Gilles SCHMITT	2010/04/06
MODIFIED BY *MODIF. PAR*	F FAURIE	2013/05/15
CHECKED BY *VERIF. PAR*	S LACOTE	2013/06/06
APPROVED BY *APPR. PAR*	Pascal MENARD	2013/06/10
FILE NAME *NOM DE FICHIER*	PCC0686506	

TITLE *DESIGNATION*: ASSEMBLY OF MALE CONNECTOR
PROJECT *PROJET*: 2W APEX280 POWER ERGOMATE
ESR NO. *NUMERO ESR*: EU090006
CAT. NO. *NUMERO CAT*: -
DOCUMENT UNDER PDS CONTROL *DOCUMENT GERE SOUS P.D.S.*
NO MODIFICATION ALLOWED OUTSIDE *PAS DE MODIFICATION EN DEHORS*

DRAWING NUMBER *REF. PLAN*: PCC0686506
REV. *IND.*: B
STATE *ETAT*: SERIAL RELEASED
PART NUMBER *REF. ARTICLE*: See Table
REV. *IND.*: -
APPROVAL LEVEL *NIV. D'APPROBATION*: -
SHEET *FEUILLE*: 2 of / sur 2
SCALE *ECH*: 1:1

EUR C04 112 F29