"LEVER CLOSED & TPA OPEN"
DELIVERY CONDITION
FROM MVL TO HARNESS
MAKER

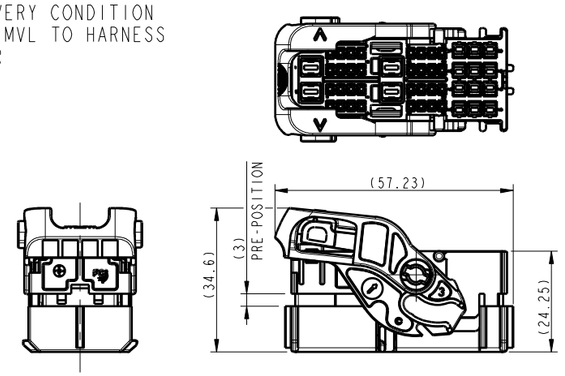

"LEVER OPEN & TPA CLOSED"
DELIVERY CONDITION
FROM HARNESS MAKER
TO ASSEMBY LINE

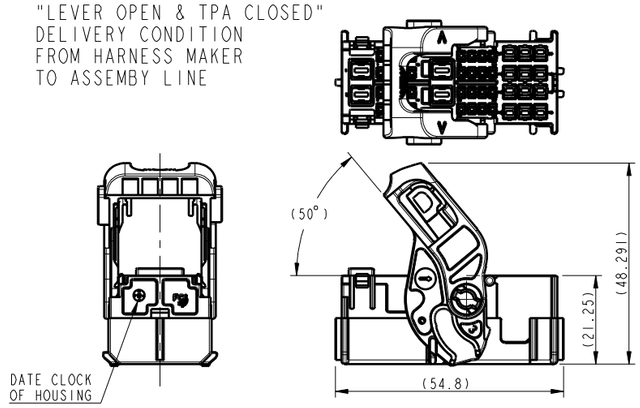

DESC.	HYBRID 48WAY FEMALE CONN (A-CODE)	HYBRID 48WAY FEMALE CONN (B-CODE)
MVL PART NO	902604-00	902602-00
DELPHI PART NO	33500277	33500275
VIEW DIMENSION	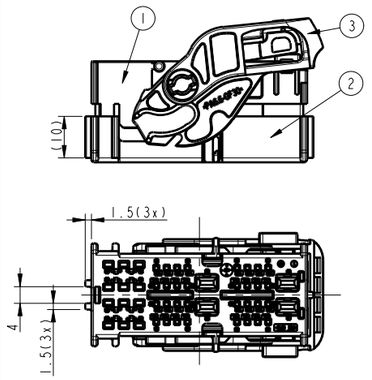	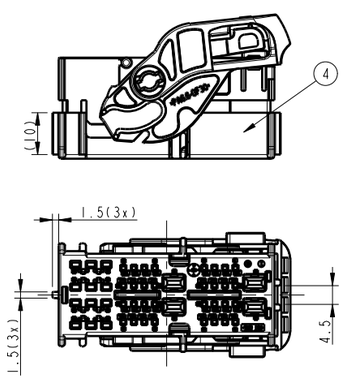

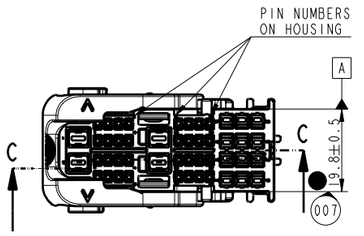

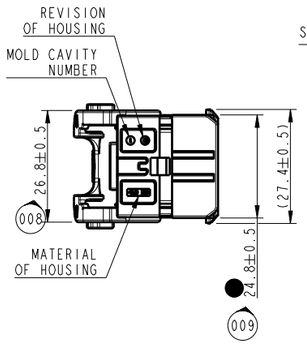

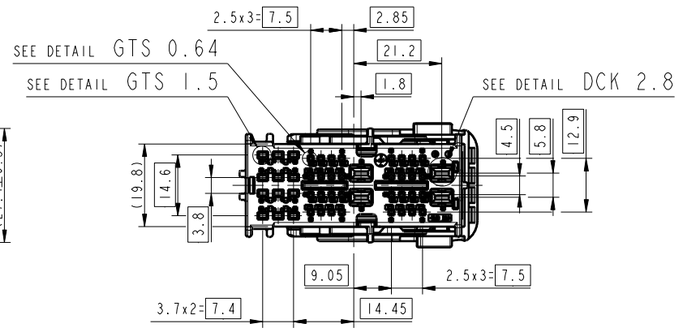

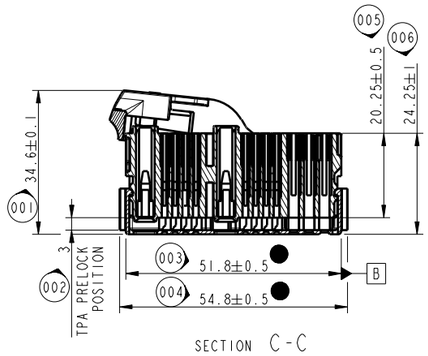

SECTION C-C

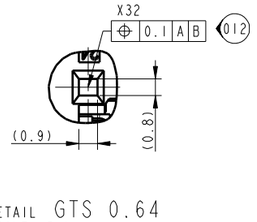

DETAIL GTS 0.64
SCALE 5:1

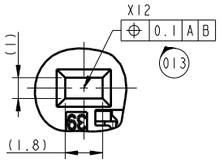

DETAIL GTS 1.5
SCALE 5:1

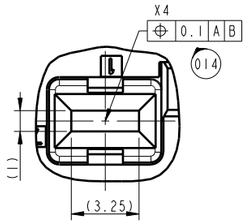

DETAIL DCK 2.8
SCALE 5:1

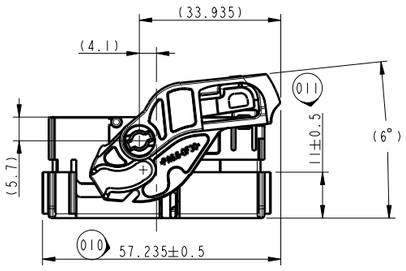

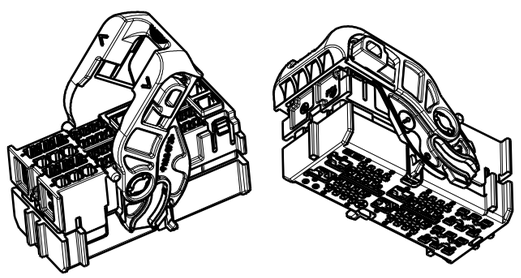

ASSOCIATED PARTS

DESC.	PLATING	MVL REFERENCE	DELPHI REFERENCE	WIRE SIZE sq.mm	TYPE	MATERIAL
GTS3 0.64 female	Sn PLATED	260CCIS0120	33500712	0.22-0.35	0.64X0.64	CuNi3SiIMg
GTS3 0.64 female	Sn PLATED	260CCIS1120	33502051	0.5	0.64X0.64	CuNi3SiIMg
GTS3 0.64 female	Sn PLATED	260CCIS2120	33500713	0.75-1.0	0.64X0.64	CuNi3SiIMg
GTS3 1.5 female	Sn PLATED	PP10000597	33510899	0.5-0.85	1.5X0.8	CuNiSi
GTS3 1.5 female	Sn PLATED	PP10000598	33510904	1.0-1.3	1.5X0.8	CuNiSi
GTS3 1.5 female	Sn PLATED	PP10000599	33510908	1.4-2.0	1.5X0.8	CuNiSi
DCK 2.8 female	Sn PLATED	6 001 36 31	13609027	0.5-1.0	2.8X0.8	CuNiSi/CrNi
DCK 2.8 female	Sn PLATED	6 001 36 41	13609025	>1.0-2.5	2.5X0.8	CuNiSi/CrNi

DIN ISO 2768	Tolerance Class medium (m)						
Linear dimensions except for broken edges	Permissible deviations for basic size range (mm)						
	0,5 *) up to 3	over 3 up to 6	over 6 up to 30	over 30 up to 120	over 120 up to 400	over 400 up to 1000	over 1000 up to 2000
	±0,1	±0,1	±0,2	±0,3	±0,5	±0,8	±1,2
Broken edges (radii, chamfers)	Permissible deviations for basic size range (mm)						
	0,5 *) up to 3		over 3 up to 6		over 6		
	±0,2		±0,5		±1		
Angular dimensions	Permissible deviations for ranges of lengths, in mm, of the shorter side of the angle concerned						
	up to 10	over 10 up to 50	over 50 up to 120	over 120 up to 400	over 400		
	±1°	±0° 30'	±0° 20'	±0° 10'	±0° 5'		

*) For nominal sizes below 0,5mm, the deviations shall be indicated adjacent to the relevant nominal size(s).

NOTES
1. NOT SPECIFIED TOLERANCE : ISO 2768 (M)
2. MUST BE FREE OF CRACK, FLOW MARK, FLASH, BURR ETC
   THAT AFFECT FUNCTION OF PRODUCT
3. REGARDING CUSTOMER MARK AND MVL MARK, DISCUSS LATER
4. THIS PRODUCT MUST MEET SYMC SES-E-060-07
5. UNLESS OTHERWISE SPECIFIED TO VENDOR SPECIFICATION.
6. APPLICABLE HOUSING : MVL P/N-902605/03-00/ DELPHI P/N-33500278/33500276
7. MATCHING DIMENSION

Pos.	Component description	Part Number	Color	Material	Weight
1	Female Housing	502873-01	Black	PBT GFI5%	14.37
2	Female TPA (A-code)	502874-01	White	PBT GFI5%	3.98
3	Female Lever	502875-00	Black	PA66 GF30%	4.37
4	Female TPA (B-code)	502877-01	Grey	PBT GFI5%	3.98

Description	MVL Part Number	DELPHI Part Number	Color	Coding	Qty of Item			
Hybrid 48way Female conn (B-code)	902602-00	33500275	Grey	B	1		1	1
Hybrid 48way Female conn (A-code)	902604-00	33500277	White	A	1	1	1	

ECN-NO. ECN 번호	POSITION 위 치	CHANGE DESCRIPTION 변 경 사 항
-	-	-
-	-	-
-	-	-
PD15-030	-	DELPHI P/N ADDED
PD08-032	5B	CHANGE COMPONENT PART NUMBER (WITHOUT LEVER)

PRODUCT SPEC. 제품 규격: KN-06-008
PACKAGING SPEC. 포장 규격:
APPLICATION SPEC. 사용 규격:

COPYRIGHT DELPHI CORPORATION AND/OR ITS AFFILIATES. ALL RIGHTS RESERVED. REVISED
THIS DRAWING IS THE PROPERTY OF DELPHI CORPORATION AND CONTAINS DELPHI CONFIDENTIAL INFORMATION. THE REPRODUCTION, DISTRIBUTION AND UTILIZATION OF THIS DOCUMENT OR ITS RELATED CAD MATH DATA, AS WELL AS COMMUNICATION OF ANY CONTENT TO OTHERS, WITHOUT EXPRESS AUTHORIZATION, IS PROHIBITED.
이 도면을 델파이 주식 회사의 재산이 아 델파이 기밀 정보를 포함 합니다. 재생산, 이용 및 공중에게 전시 또는 전파한 CAD 수학 데이터, 본문 이나의 통신에 서스크 권리의 승인 없이 다른 사람에 게 하는 근본으로 금합니다.

TOLERANCES 공 차	ISO 2768 (M)
COUNTERPART Nr. 상대물 품번	902605/03-00
DO NOT MEASURE DRAWING 도면을 측량하지 말것	
MATERIAL : 재 질 :	SEE TABLE
COLOUR : 색 상 :	SEE TABLE
SURFACE FINISH 표면 처리	-
TOOL NO. 금형 번호	
ECO Loc. Code ECO 위치코드	KN

	DATE 날 짜	NAME 이 름
CREATED BY 작 성	06/07/31	ANUP JS
MODIFIED BY 수 정	15/02/06	BAEKHC
CHECKED BY 검 토	15/02/06	PARKJH
APPROVED BY 승 인	15/02/06	LEEMY
FILE NAME 파 일 명	HYB_48W_F_CONN	

DELPHI
DELPHI PACKARD ELECTRICAL/ELECTRONIC ARCHITECTURE
NAMYANG, KOREA

THIRD ANGLE 제 각 법 | DIMENSION IN MILLIMETERS 치수단위 밀리미터

TITLE 품 명: HYBRID 48WAY UNSEAELD FEMALE CONNECTOR (A & B-CODE)

PROJECT 프로젝트명: -

ESR NO. AP-060053 | CAT. NO. 목록 번호

DOCUMENT UNDER PDS CONTROL PDS에 의해 관리되는 문서임.
NO MODIFICATION ALLOWED OUTSIDE 허락없이 수정은 제한되어 있음.

CAD SYSTEM	pro / eng.
DWG SIZE 도면 크기	A2
DRAWING NUMBER 도 면 번 호	SEE TABLE
REV. 개정	F
APPROVAL LEVEL 승인 수준	SERIAL RELEASE
STATE 상 태	
SHEET 도면수	1 of 1
SCALE 축 척	1:1