10 POS. AK INTERFACE (35473655, 35473656)

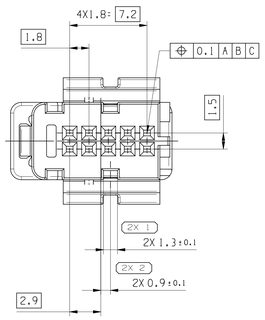

20 POS. AK INTERFACE (35434068, 35434069)

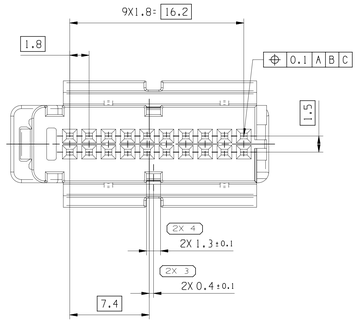

20 POS. TE INTERFACE (35504272)

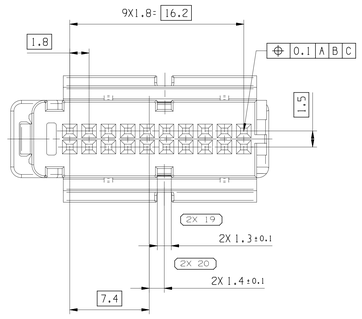

CODING A

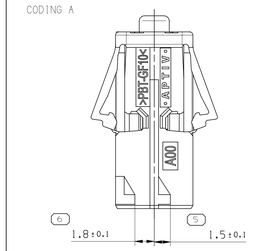

CODING B

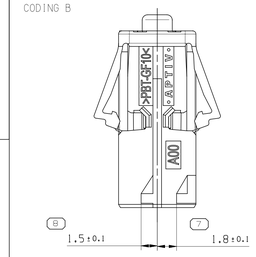

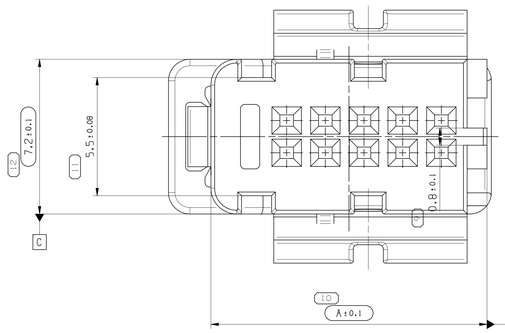

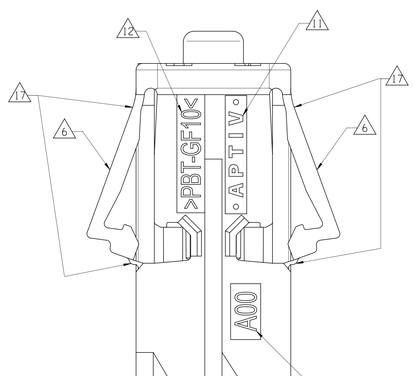

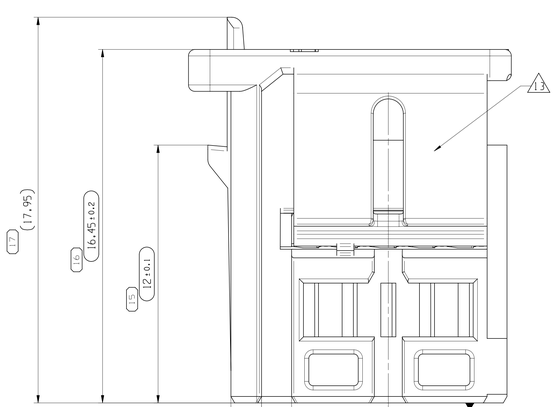

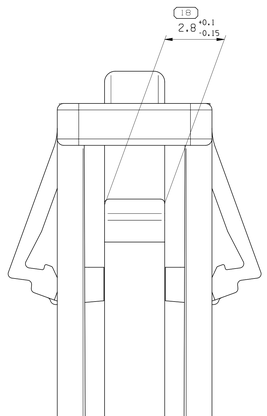

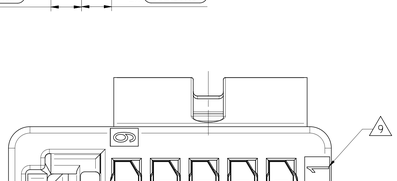

POLECOUNT	DELPHI ORDER NO.	Rev.	CODING	MATERIAL	COLOR	WEIGHT(g)	SUITABLE TO	DIMENSION A
10	35473655	01	A	PBT-GF10	BLACK	1.2	INTERFACE S1051201	12.85
	35473656	01	B		WHITE			
20	35434068	01	A		BLACK	2.0		21.85
	35434069	01	B		WHITE			
	35504272	01	A		BLACK		2208165-1	

SUITABLE FEMALE CONTACT	DRAWING-NO.	MAX. WIRE CROSS SECTION
DELPHI CTS050	33124947	0.35mm² FLRY
TE NANOMQS	13990010	0.35mm² FLRY

SEALING CLASSIFICATION	NOT WATERPROOFED
VIBRATION CLASSIFICATION SEVERITY	2
TEMPERATURE RANGE	-40° ...+105° C
CLASSIFICATION ACC.	LV214 (14)

SYMBOL DEFINITION

A DIMENSION WITHOUT AN INSPECTION REPORT SYMBOL (⬭) DOES NOT REQUIRE INSPECTION. IT MAY BE CONTROLLED ON THE INDIVIDUAL COMPONENT DRAWING.	TOTAL NO OF INSPECTIONS REQUIRED	28
	LAST NO. USED	20

MISSING SYMBOLS

NO MISSING SYMBOL NUMBER

DWG STATUS					ZONE	REVISION HISTORY	AUTH	DR	APVD1	APVD2
DATE	STG	REV	N/P	CHG						
01SE20	R	01	-	-		INITIAL RELEASE		LW	CJY	HSB
09DE20	R	02	-	-		ADD NEW CODE 3554042?2		LW	KZ	HSB
20MY21	R	02	AA	-		REMOVE 35473655,35473656 DATE CLOCK	447218	LW	KZ	HSB

3D VIEW / 3D ANSICHT
SCALE 1:1

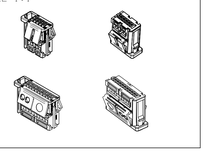

NOTES

1 ONLY THE GERMAN LANGUAGE SHALL BE BINDING

2 MAX. WIRE SIZE RANGE 0.35mm²

3 PART LINE BURR AND FLASH <0.3mm PERMITTED, IF FUNCTION IS NOT IMPAIRED

4 PACKAGING AS LOOSE PIECE

5 GENERAL TOLERANCE: ISO 8015-DIN EN ISO 291:2008-08 (⬭ 0.3 CZ)

△6 DELIVERY CONDITION:
SECONDARY LOCKING DEVICE IN PRELOCKING POSITION,
LOCKED POSITION PERMISSIBLE, FURTHER PROCESSING ACCORDING
APPLICATION SPECIFICATION

△9 TERMINAL CAVITY MARK

△10 MOULD CAVITY MARK

△11 APTIV COMPANY LOGOTYPE

△12 MATERIAL IDENTIFICATION

△13 DATE CLOCK

14 PRODUCT SPECIFICATION PS33266275

15 APPLICATION SPECIFICATION AS33266275

16 6POS. CODING A AS SHOWN

△17 STRESS WHITENING PERMISSIBLE, IF NO NEGATIVE EFFECT ON FUNCTION

PRELIMINARY
DRAWING
DO NOT USE FOR TOOLING OR DISTRIBUTION
ECO TBD
C/N

A LINE DRAWN THROUGH A PART NUMBER INDICATES THAT PHYSICAL PARTS ARE NOT AVAILABLE FOR ORDERING.

PART NUMBERS THAT DO NOT HAVE A LINE PRESENT INDICATE THAT PHYSICAL PARTS ARE AVAILABLE FOR ORDERING.

CONTACT APTIV SALES TO ASSURE AVAILABILITY OF PARTS.

DWG TYPE: PART DRAWING

STYLE

VOLUME (CM³): SEE TABLE

DISTR CODE: D

UNLESS OTHERWISE SPECIFIED
THIS DOCUMENT IS IN ACCORDANCE WITH ASME Y14.5-2009, SEE DELPHI ENGINEERING DESIGN STANDARD 86 2017 FOR ISO 11012004 RECONCILIATION REQUIREMENTS.

ALL DIMENSIONS ARE IN MILLIMETERS

REFERENCE

THIRD ANGLE PROJECTION

DO NOT SCALE

USE MATH DATA

NX

DIMENSIONAL RANGE (MM)									CHART E1
FROM	> 0	>20	>30	>70	>100	>150	>200	>250	>300
TO	20	30	70	100	150	200	250	300	400
TOLERANCE UNLESS OTHERWISE SPECIFIED									
	±0.15	±0.2	±0.3	±0.4	±0.5	±0.6	±0.8	±	±1.2
ANGULAR TOLERANCE 2°									

DELPHI
CONNECTION SYSTEMS
Anting, China

COPYRIGHT 2020 DELPHI CORPORATION AND/OR ITS AFFILIATES. ALL RIGHTS RESERVED.

THIS DRAWING IS THE PROPERTY OF DELPHI CORPORATION AND CONTAINS CONFIDENTIAL INFORMATION. THE REPRODUCTION, DISTRIBUTION AND UTILIZATION OF THIS DOCUMENT OR ITS RELATED CAD MATH DATA, AS WELL AS THE COMMUNICATION OF ANY CONTENTS TO OTHERS, WITHOUT EXPRESS AUTHORIZATION, IS PROHIBITED.

	NAME	DATE
DR	LUKE WANG	01SE20
APVD1	CHEN JIAYUN	01SE20
APVD2	HUANG SUIBIN	01SE20
APVD3		
APVD4		
APVD5		

SUBSTANCES OF CONCERN AND RECYCLED CONTENT PER DELPHI 10949001

MATERIAL: SEE TABLE

DRAWING NAME: CTS050 10W 20W CONN

DRAWING NUMBER: 35493862

SIZE	SCALE	FRAME NO	SHEET NO	STG	REV	N/P
A0	10:1	1 OF 1	1 OF 1	R	02	AA

User: BZ5HS
Plot Date: 20-Oct-21 Time: 17:39:49
SCHUNK-CTS\Projects\CTS\Drawings\35493862.CATDrawing