

TPA PRE-LOCK POSITION

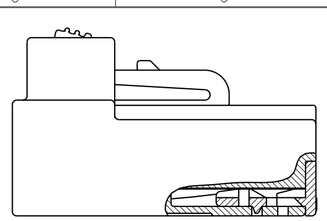

TPA LOCK POSITION

NOTE	
1	MATERIAL IDENTIFICATION CODE ACC. VDA260
2	DATA CLOCK
3	CAVITY MARK
4	FCI COMPANY LOGO
5	REVISION INDEX SEE TABLE
6	CAVITY NO.

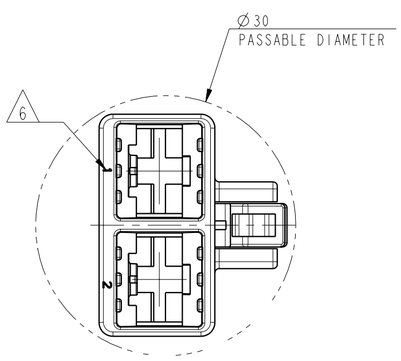

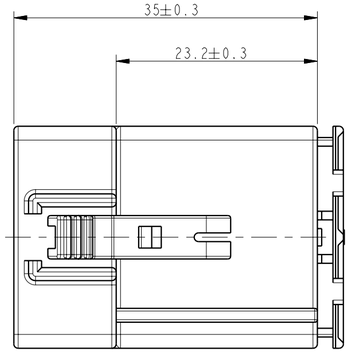

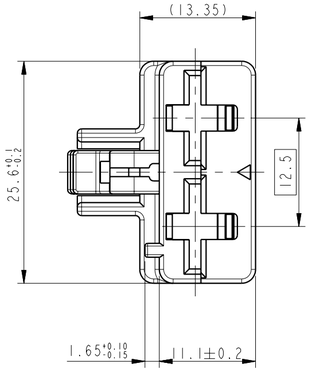

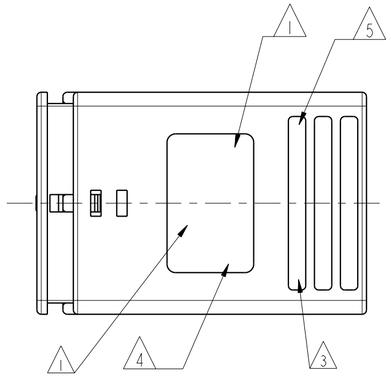

SECTION A-A

3D VIEW

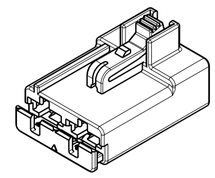

SCALE 1:1

F280400	2	1	TPA	PBT-GF15	GRAY
	1	1	HOUSING 2-WAY	PBT-GF30	BLACK
FCI-PART-NO	ITEM POSITION	QUANTITY	NAME	MATERIAL	COLOUR

DCS 9.5 FEMALE TERMINAL (BOX VERSION)	Sn VERSION	6 007 04 71	>6.00 -10.00	CANTACT BODY: Cu Cr Ti Si / Sn (K75) LOCLING SPRING: X10 Cr Ni 18 8 / BLANK
		6 007 04 61	>4.00 -6.00	
		6 007 04 51	>2.50 -4.00	
DESCRIPTION		FCI PART- NO.	WIRE CORSS SECTION (mm)	MATERIAL/SURFACE

PD09-008	-	-
	-	-
	-	-
	-	-
	-	INITIAL RELEASE

ECN-NO. ECN !ø£€	POSITION Aß Ai	CHANGE DESCRIPTION º¯ ™ »ç Çx

PRODUCT SPEC. Á¡Ç* ±Ó*Ý	PACKAGING SPEC. Æ•Aö ±Ó*Ý	APPLICATION SPEC. »çÇÉ ±Ó*Ý
-	-	-

THIS DRAWING AND ALL OTHER INFORMATION CONTAINED THEREIN IS PROPRIETARY AND THE PROPERTY OF FCI.This drawing may not be copied, reproduced or disclosed to any third party without the expressed written permission of FCI.
© FCI April 1999

TOLERANCES *ø Á+	±0.1 ±2 -
COUNTERPART Nr. »ó´ê¹* Ç*!ø	-
DO NOT MEASURE DRAWING µµ,¢Á» Áø•ΦÇÎÁö ,»*¡	

MATERIAL : Áç Áü :	- -
COLOUR : »ö »ó :	- -
TOOL NO. ±ÝÇ9 !ø£€	-

SURFACE FINISH Çÿ.¢ Á?.Ø	- -
ECO Loc. Code ECO Á§Á:ÁÚµß	KN

	DATE ³¯ Á¥	NAME Á! ,§
CREATED BY Áü ™°	2009/02/06	S ELUMALAI
MODIFIED BY ™§ Á€	2009/03/09	You-Min KIM
CHECKED BY *£ Áä	2009/06/16	SeogJe JO
APPROVED BY ®Á Á!	2009/06/16	MinYoung LEE
FILE NAME €Á Á¯ ,¡	PCC0618041	

TITLE Ç* . ¡

DCS 2WFEMALE CONNECTOR

PROJECT ÇÁ·1Á§£Ø. ¡

ESR NO. !ø£€ AP-080008

DOCUMENT UNDER PDS CONTROL
NO MODIFICATION ALLOWED OUTSIDE

THIRD ANGLE »Ì¯*ç ¡Ý	CAD SYSTEM pro / eng.
DIMENSION IN MILLIMETERS Á¡™ö ´ÚÁ§ !D,Ø¡!ÁÍ	DWG SIZE µµ.¢ Á£±ö A2

DRAWING NUMBER µµ ,é !ø £€	REV. *ªÁ€ A
STATE »ó ÁÀ	SERIAL RELEASED
PART NUMBER Á¡ Ç* !ø £€	REV. *ªÁ€ A
CAT. NO. ,¡¯! !ø£€	-

APPROVAL LEVEL ®ÁÁ! ™§Á@ -	SHEET µµ.¢™ö 1 of 1 Áç 1
SCALE Áö Á´ 1:1	

PDS¿¡ ÁÇÇØ *Ø.®µÇ Á !ø¥.ÁO.
¿Ú°Ï¿¡™. ™ö£Á@° ÇöÇ±µÇÁß ™€Á@.

F280400 A