SYMBOL DEFINITION		
A DIMENSION WITHOUT AN INSPECTION REPORT SYMBOL ⬭ DOES NOT REQUIRE INSPECTION. IT MAY BE CONTROLLED ON THE INDIVIDUAL COMPONENT DRAWING.	TOTAL NO OF INSPECTIONS REQUIRED	4
	LAST NO. USED	4

MISSING SYMBOLS
NO MISSING SYMBOL NUMBER

DWG STATUS					ZONE	REVISION HISTORY	AUTH	DR	APVD 1	APVD 2
DATE	STG	REV	N/P	CHG						
15MY02	R	04	-	-		CLEARED REV COLUMN; ALL PARTS - REVISED NOTE 2	224776	EGR	EGR	GO
07JN02	R	05	-	-		ALL PARTS - UPDATED PDM ATTRIBUTES	226564	TLD	TLD	PMJ
05MY06	R	06	-	-		ALL PARTS - UPDATED PDM ATTIRBUTES	280180	RTV	JAA	CSD
07AU12	R	07	-	-		ALL PARTS - UPDATED PDM ATTRIBUTES	419181	AH	AH	AH
19OC15	R	08	-	-		ALL PARTS - UPDATED PDM ATTRIBUTES	431120	AGC	JVM	RPL
06MY20	R	09	-	-		12160551 - 52 - ADDED PLATING TYPE NOTE, CONTACT & CRIMP AREA PLATING LABELS AND RELATED COLUMNS INFO ON CHART; 35455671 & 35455698 - RELEASED	551354	LGD	JAA	OM
21AU20	R	10	-	-		12160551-52 - UPDATED "PLATING TYPE" NOTE (MAT'L SPEC WAS M6056842); 12160552 - UPDATED PART AVAILABILITY; 35455671, 35455698 - UPDATED PDM ATTRIBUTES	552148	JLL	JAA	OM

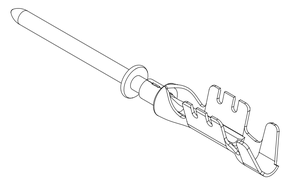

VIEW SCALE DOES NOT REFLECT ACTUAL PART SIZE

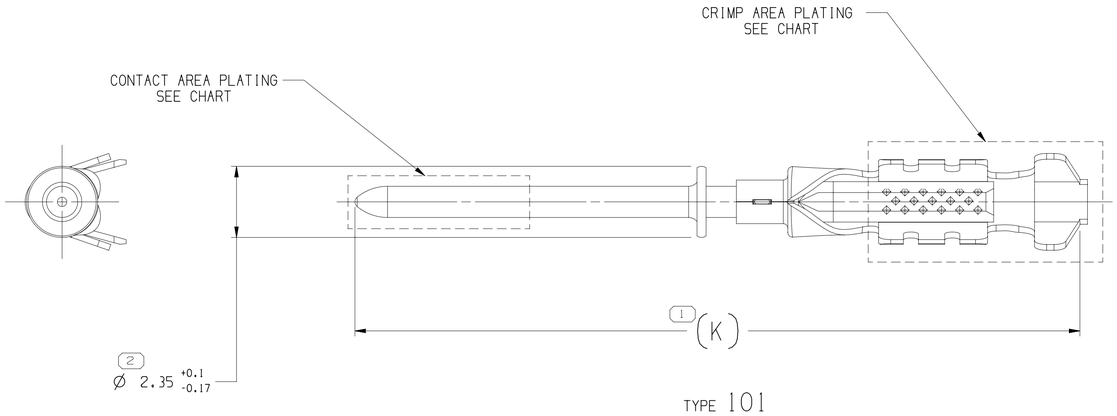

TYPE 101

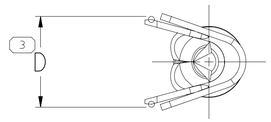

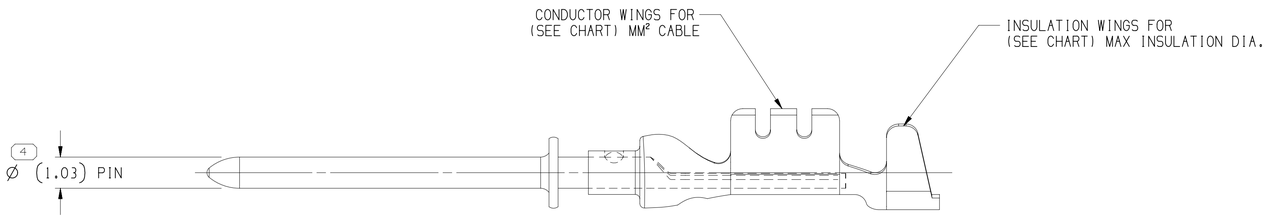

NOTES

1. UNLESS OTHERWISE SPECIFIED AND/OR INDICATED:

   DIMENSIONS ARE TO FACE OF VIEW SHOWN AND AUTOMATICALLY ROUNDED BY COMPUTER FOR INSPECTION (SEE MATH MODEL FOR PRECISE DIMENSIONS). FOR ALL OTHER DIMENSIONS NOT SHOWN BUT REQUIRED FOR TOOL BUILD, SEE MATH MODEL FOR PRECISE TOOL PATH DATA.

2. REFERENCE MATING COMPONENTS OR EQUIVALENT:
   CONNECTOR 12160542
   TERMINAL 12084912

3. PLATING TYPE:
   I . ELECTRODEPOSITED DUCTILE NICKEL UNDERPLATE PER Q Q-N-290A, 0.0013 MM MIN THICKNESS OVER ENTIRE PART.
   II . ELECTRODEPOSITED LEAD FREE MATTE TIN PER M6056863
   III. ELECTRODEPOSITED GOLD PLATED 0.0005 MM MIN THICKNESS PER MIL-G-45204C, TYPE II GRADE C, 130-200 KNOOP HARDNESS

PART NO	REV	N/P	TYPE	MATERIAL	MATERIAL SIZE	PART NO	REV	N/P	MAT'L SPEC	CONTACT AREA PLATING TYPE (SEE NOTE 3)	CRIMP AREA PLATING TYPE (SEE NOTE 3)	SIZE (MM²)	DIA±0.08	I.D. NO.	D±0.2	(K)
	UNPLATED					PLATED						CABLE				
35455698	01	AA	101	COPPER ALLOY	0.203 THK X TBD	12160552	03	AB	35455698	III	II	0.35-0.5	-	21	2.3	23.95
35455671	01	AA	101	COPPER ALLOY	0.203 THK X TBD	12160551	03	AB	35455671	III	II	0.5-.8	2.04	18/20	2.8	23.95

2 PROCESS SENSITIVE DIMENSION

DIMENSIONS ENCLOSED IN ( ) INDICATE REFERENCE DIMENSIONS AND NO TOLERANCE LIMITS ARE ESTABLISHED

DIMENSIONAL RANGE (MM)		CHART D
FROM	0	>12
TO	12	
TOLERANCE UNLESS OTHERWISE SPECIFIED	±0.1	±0.2
ANGULAR TOLERANCE ±2°		

A ⟍ LINE DRAWN THROUGH A PART NUMBER INDICATES THAT PHYSICAL PARTS ARE NOT AVAILABLE FOR ORDERING.

PART NUMBERS THAT DO NOT HAVE A LINE PRESENT INDICATE THAT PHYSICAL PARTS ARE AVAILABLE FOR ORDERING.

CONTACT APTIV SALES TO ASSURE AVAILABILITY OF PARTS.

DWG TYPE: PART DRAWING

STYLE

VOLUME (CM³)

DISTR CODE

UNLESS OTHERWISE SPECIFIED

THIS DOCUMENT IS IN ACCORDANCE WITH ASME Y14.5M-1994 AS AMENDED BY THE GM GLOBAL DIMENSIONING AND TOLERANCING ADDENDUM - 1997. ALL GEOMETRIC TOLERANCES AND RELATED DATUMS APPLY RFS. RULE #1(PERFECT FORM AT MMC) DOES NOT APPLY WHEN RELATIONSHIP BETWEEN FEATURES IS ESTABLISHED BY ORIENTATION OR LOCATION TOLERANCES. SEPARATE POSITION CALLOUTS MAY BE GAGED SEPARATELY, REGARDLESS OF DATUM REFERENCE.

ALL DIMENSIONS ARE IN MILLIMETERS

REFERENCE: 12110797

THIRD ANGLE PROJECTION

DO NOT SCALE

USE MATH DATA

CAD NX

•APTIV•

CONNECTION SYSTEMS
WARREN, OH

COPYRIGHT 2000 APTIV. ALL RIGHTS RESERVED.

THIS DRAWING IS THE PROPERTY OF APTIV AND CONTAINS APTIV CONFIDENTIAL INFORMATION. THE REPRODUCTION, DISTRIBUTION AND UTILIZATION OF THIS DOCUMENT OR ITS RELATED CAD MATH DATA, AS WELL AS COMMUNICATION OF ANY CONTENT TO OTHERS, WITHOUT EXPRESS AUTHORIZATION, IS PROHIBITED.

		DATE
DR		
APVD1	A. ARZATE	15MY00
APVD2	FCO. RESENDIZ	07JL00
APVD3	G. ORANTES	08JL00
APVD4		
APVD5		

SUBSTANCES OF CONCERN AND RECYCLED CONTENT PER APTIV 10949001

MATERIAL: SEE CHART

DRAWING NAME: TAXI TERM M MIC/P 100W

DRAWING NUMBER: 12160550

SIZE	SCALE	FRAME NO	SHEET NO	STG	REV	N/P
A1	10:1	1 OF 1	1 OF 1	R	10	-

User: 1026z2 Part: 12160550-CUS01-S01/10 Date: 10-Sep-20 Time: 09:06:41
12026z,091020020,091041726pass.prt