DWG STATUS					ZONE	REVISION HISTORY	AUTH	DR	APVD	APVD
DATE	STUD	REV	PVP	CHG						
07FB17	R	01				FILE TRANSLATED FROM MVL SYATEM RERAWN IN A3 SHEET CHANGED FROM A0 TO A1x3		DUR	PAV	PAV
26OC21	R	02	-	-		1375377B (5420141B) - CORRECTED CALLOUT P/N ON CHART, WAS INDENTIFIED AS 1075777B	555730	JAA	JAA	JA
30MY24	R	03	-	-		35B31205 - RELEASED AND ADDED "CREEPAGE & CLEARANCE" NOTE	564442	CDD	CDD	DML

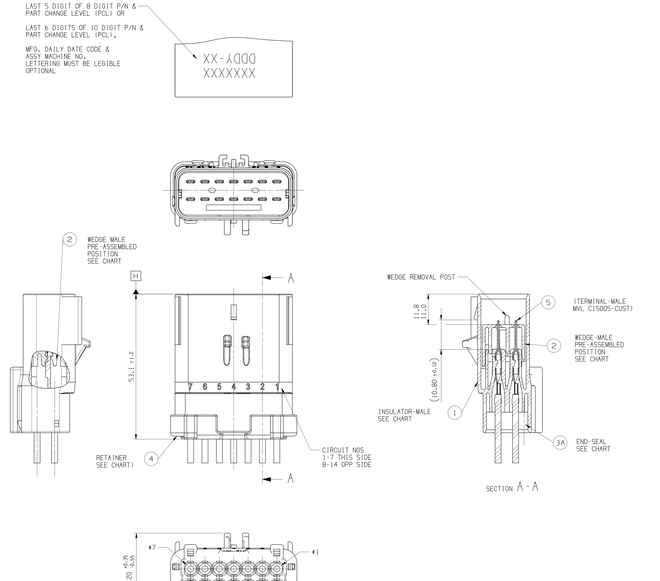

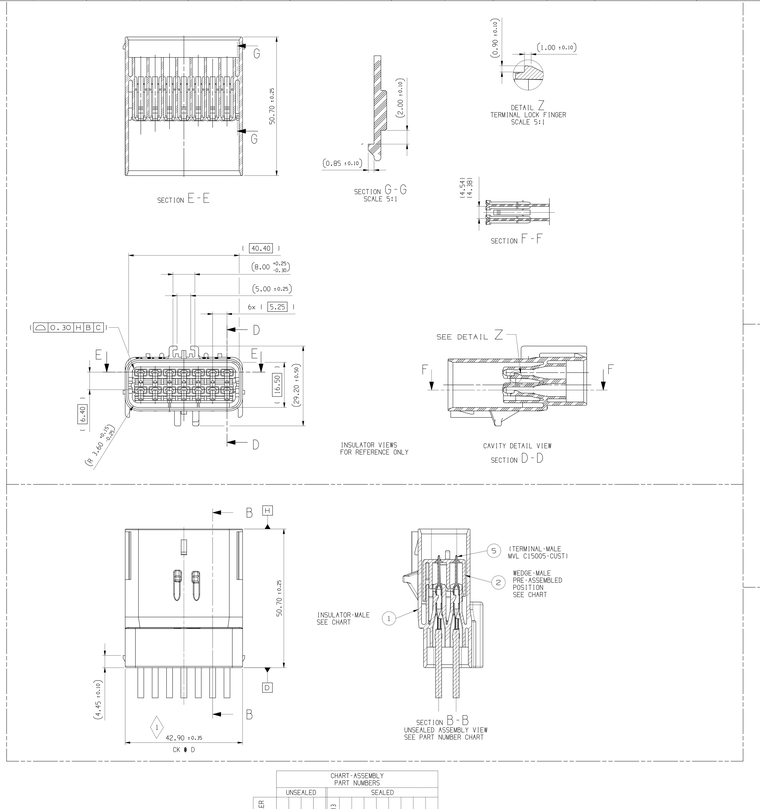

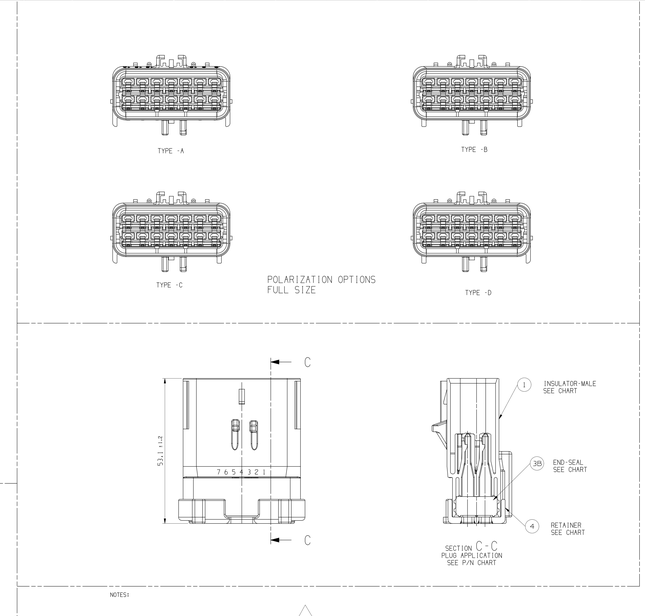

NOTES:

1 QUALITY ASSURANCE REQUIREMENTS PER CHRYSLER PS-7300: 1 SPC DATA REQUIRED

2 ENGINEERING APPROVAL OF SUPPLIER SAMPLES IS REQUIRED PRIOR TO AUTHORIZATION OF PART PRODUCTION

3 CHANGES IN DESIGN COMPOSITION OR PROCESSING FROM THE PART PREVIOUSLY APPROVED FOR PART PRODUCTION REQUIRES PRIOR ENGINEERING APPROVAL

4 WIRING FABRICATORS MUST PURCHASE FROM SOURCES SHOWN

5 ALL SEALED APPLICATIONS WITH 33401040 MAT SEAL CAN BE USED WITH FOLLOWING INSULATION RANGES:
Ø1.70 TO Ø4.09 (12AWG TO 10AWG) ALL CIRCUITS
Ø1.70 TO Ø3.80 (0.75mm² TO 4mm²) ALL CIRCUITS
Ø1.70 TO Ø4.20 16 CIRCUITS WITH 5mm² 2 ON ENDS & 2 AT CENTER AND REMAINING 8 CIRCUITS (0.75mm² TO 4mm²)

6 ALL NON-SEALED APPLICATIONS MAY BE USED WITH ANY WIRE Ø1.40 TO Ø4.20 (22AWG TO 10AWG) OR (0.5mm² TO 5mm²) EXCEPT AS NOTED PROVIDING THAT A TERMINAL GRIP FOR THAT CORE/INSULATION COMBINATION IS SHOWN ON THE MALE TERMINAL DRAWING

NOTE: MAX. INSULATION CRIMP WIDTH = 4.50
MAX. INSULATION CRIMP HEIGHT = 4.50
MAX. INSULATION = Ø4.20 (10AWG OR 5mm² ISO THIN WALL)

7 USE WITH CAVITY PLUG MVL 5420005 DELPHI 15316894 WHEN REQ'D
USE WITH DOUBLE X-MAS TREE CLIP MVL 5420010 W/FORWARD STOP WHEN REQ'D
USE WITH DOUBLE X-MAS TREE CLIP CHRYSLER 04707091 WHEN REQUIRED
USE WITH SINGLE X-MAS TREE CLIP CHRYSLER 04625797 WHEN REQUIRED
USE WITH 2.80MM AMEX MALE TERM PER MVL C15005-CUST SYM ABOUT CENTERLINE FOR 180° ORIENTATION

8 TEST METHOD PER SAE/USCAR-2 REV.5, CONNECTOR ENGAGE & DISENGAGE WITH FEMALE LATCH DEPRESSED FORCE NOT TO EXCEED (42N [22LBS/PF-7521T]) FOR THIS SYSTEM
PRESSURE 3 PSI (22 KPA) PER TEST PF-7521T

WEDGE SEATING FORCES - 150N MAX

X-MAS TREE CLIP INSERTION FORCES - 75N MAX

9 SUPPLIER, MOLD & CAVITY I.D. SIGNIFIES TOOL OWNERSHIP, FOR REFERENCE

10 ANNUAL QUALITY REQUIREMENTS:
IT IS PERMISSIBLE TO PERFORM CONTINUOUS CONFORMANCE PER MVL SPECIFICATION #4QA-001 INSTEAD OF ANNUAL LAYOUT & ANNUAL PV REQUIREMENTS OF QS-9000 SECTION 2 & PF-9600

ALL NON-REFERENCE DIMENSIONS ARE REQUIRED

- USE INDEX A, BLACK SEALED AND UNSEALED FOR ALL AFFECTED INSULATOR CAVITIES

- CURRENT PRODUCTION TOOLING

- LAST RUN

SERVICE TRAINING GUIDE INFORMATION PER APEX TRAINING MANUAL

11 MUST CONFORM TO THE FOLLOWING CHRYSLER/VNA STANDARDS:

1. SAE/USCAR-2 REV 5 EXCEPT AS NOTED ABOVE
2. PS-7300 QUALITY ASSURANCE (CHRYSLER)
3. MS-9000 SEAL APPL. : 125 ° C
4. MS-9288 SEAL APPL. : 125 ° C
5. PS-9027 DATA EXCHANGE (CHRYSLER), (9009-7 VNA)
6. PS-10052 INFORMATION SECURITY (CHRYSLER)

12 THIS DRAWING (H59016) REPLACED CHRYSLER DRAWING 04687887 REV "H"

13 MVL SUPPLIER CODE: 52772 OR 52772H

14 ASM CONNECTOR 35B31205 WAS ANALIZED FOR CREEPAGE & CLEARANCE FOR 48 VOLTS.

MATING PART NUMBER CHART

D	LT GREEN	UNSEALED	DIRECT CONNECT APPLICATION			54201452N	3751145Z	N/A	N/A
		UNSEALED	DIRECT CONNECT APPLICATION			54201452	3751146O	04868345AA	N/A
	NATURAL	UNSEALED	DIRECT CONNECT APPLICATION			54201403N	3751145Y	N/A	N/A
		UNSEALED	DIRECT CONNECT APPLICATION			54201403	3750012O	04687932	7283-4649
		SEALED	54201464	15537591	N/A	N/A	54201414	13755839	04687928	7283-4749
		SEALED	54201418	13753778	N/A	N/A	54201414N	3751147I	N/A	N/A
		SEALED	54201418	13753778	04707243	N/A	54201414	13755839	04687928	7283-4749
C	DK GREY	UNSEALED	DIRECT CONNECT APPLICATION			54201402N	3751145G	N/A	N/A
		UNSEALED	DIRECT CONNECT APPLICATION			54201402	3751146Z	04687931	7283-4648-10
		SEALED	54201463	15537594	N/A	N/A	54201413	10763696	04687927	7283-4748-10
		SEALED	54201417	10757675	N/A	N/A	54201413N	3751147O	N/A	N/A
		SEALED	54201417	10757675	04707241	N/A	54201413	10763696	04687927	7283-4748-10
B	LT GREY	UNSEALED	DIRECT CONNECT APPLICATION			54201453N	3751145L	N/A	N/A
		UNSEALED	DIRECT CONNECT APPLICATION			54201453	3751145Y	N/A	7283-4747-40 (E0001361)
		UNSEALED	54201405	33500121	N/A	N/A	54201401N	3751145S	N/A	N/A
		UNSEALED	54201405	33500121	04687936	N/A	54201401	15537608	04687930	7283-4647-40
		SEALED	54201462	15537595	N/A	N/A	54201412	13533441	04687926	7283-4645-40
		SEALED	54201416	10757673	N/A	N/A	54201412N	3751146Y	N/A	N/A
		SEALED	54201416	10757673	04687934	N/A	54201412	13533441	04687926	7283-4645-40
A	BLACK	UNSEALED	54201404	13581869	N/A	N/A	54201442N	3751145J	N/A	N/A
		UNSEALED	54201404	13581869	04687935	N/A	54201442	3751146I	04868197AA	N/A
		UNSEALED	54201404	13581869	N/A	N/A	54201400N	3751145K	N/A	N/A
		UNSEALED	54201404	13581869	04687935	N/A	54201400	13582973	04687929	7283-4644-30
		SEALED	54201459	15537596	N/A	N/A	54201411	10763414	04687925	7283-4641-30
		SEALED	54201415	10757674	04687933	N/A	54201411	10763414	04687925	7283-4641-30
		SEALED	54201415	10757674	04687933	N/A	54201419N	3751146Q	•04707242	7283-4746-30
		SEALED	54201415	10757674	04687933	N/A	54201443	13583677	•04759591AA	7283-4341-30
		SEALED	54201415	10757674	04687933	N/A	54201445N	3751146T	04707405	N/A
		SEALED	54201415	10757674	04687933	N/A	54201456N	3751146R	N/A	N/A
A	LT BLU	SEALED	-	35B31405	-	-	-	35B27369	-	-
INDEX TYPE	COLOR	SEALED/ UNSEALED	MVL	APTIV	(CHRYSLER)	TNA	MVL	APTIV	(CHRYSLER)	TNA
			CHRYSLER APPLICATION MATING ASSEMBLY PART NUMBERS FOR REFERENCE ONLY							
			MALE ASSEMBLY PART NUMBERS							

MVL - MOTORIZED VEHICLES DIVISION
TNA - YAZAKI NORTH AMERICA

CHART-ASSEMBLY PART NUMBERS

	UNSEALED				SEALED					
NON-CHRYSLER P/N'S	N/A	N/A	N/A	N/A	15125233	N/A	N/A	N/A	N/A	-
CHRYSLER P/N'S	04687935	04687936	04687930	04687929	04687931	04687934	04707241	04707243	N/A	-
APTIV REV	01	01	01	01	02	02	02	02A	01	-
APTIV P/N'S	33500121	33500121	15537608	13582973	13751472	13751472	10763674	10763674	15537594	-
MVL PCL	E	G	K	H	K	G	H	H	J	-
MVL P/N'S	54201404	54201405	54201401	54201400	54201415	54201416	54201417	54201415	54201462	-

	REQUIRED				REQUIRED						
	1				1			1			
		1							1		
						1					
			1				1				
				1				1			
	1	1	1	1	1	1	1	1	1	1	1
					1	1	1	1	1	1	1
					1	1	1	1	1	1	1
					1	1	1	1	1	1	1
	3	3	3	3	3	3	3	3	3	3	3
	SEE NOTES				SEE NOTES				PLUG		
	APPLICABLE WIRE SIZES										

COMPONENTS

ITEM	MVL	APTIV	PART NAME	MATERIAL
1		35B31204	INS-MALE INDEX A; LT BLU	NYLON 66
1	54201424	15537324	INS-MALE INDEX A; BLK	NYLON 66
1	54201425	15537325	INS-MALE INDEX B; LT GREY	NYLON 66
1	54201426	15537326	INS-MALE INDEX C; DK GREY	NYLON 66
1	54201427	15537327	INS-MALE INDEX D; NATURAL	NYLON 66
2	54201431	15537448	WEDGE-MALE; RED	NYLON 66
3	N/A	33401040	END SEAL; DK BLUE	SILICONE
4	54201457	15537419	END SEAL; BRT YELLOW (NO HOLES)	SILICONE
4	54201428	15537331	RETAINER; BLACK	NYLON 66
CONNECTOR ASSEMBLY TEMPERATURE CLASS PER SAE/USCAR-2 REV.5				

DRAWING NUMBER							
13535119							
SIZE	SCALE	FORMAT SIZE	SHEET NO	SHEET NUMBER	REV	NUM	
A1x3	2:1	2 OF 2	1 OF 1	R	03	-	

DIMENSIONAL RANGE (MM)											
FROM	0	6	30	120	315	1000	2000	4000	7000	10000	
TO	6	30	120	315	1000	2000	4000	7000	10000	15000	
TOLERANCE UNLESS OTHERWISE SPECIFIED											
±0.25	±0.5	±0.8	±1.2	±2	±3	±4	±5	±6	±7	±8	
ANGULAR											

▲ LINE DRAWN THROUGH A PART NUMBER INDICATES THAT PHYSICAL PARTS ARE NOT AVAILABLE FOR ORDERING.	
PART NUMBERS THAT DO NOT HAVE A LINE PRESENT INDICATE THAT PHYSICAL PARTS ARE AVAILABLE FOR ORDERING.	
CONTACT APTIV SALES TO ASSURE AVAILABILITY OF PARTS.	
DWG TYPE	PART DRAWING
STYLE	
VOLUME (CM³)	SYSTEM CODE
UNLESS OTHERWISE SPECIFIED	
THIS DOCUMENT IS IN ACCORDANCE WITH ASME Y14.5M-1994 UNLESS OTHERWISE SPECIFIED. ALL DIMENSIONS AND TOLERANCES INCLUDE COATS. SEPARATE PATTERNS OF FEATURES MAY BE GROUP SEPARATELY REGARDLESS OF DATUM REFERENCES.	
ALL DIMENSIONS ARE IN MILLIMETERS	
REFERENCE	H59016
THIRD ANGLE PROJECTION	DO NOT SCALE / USE MATH DATA / NX

DR	RAJKUMAR	05.JL05
APVD	Sucha SIAN	22.JL14
APVD	Mark MAJOR	22.JL14
APVD	JeFF CAMPBELL	22.JL14
APVD		
APVD		
SUBSTANCES OF CONCERN AND RECYCLED CONTENT PER APTIV (DRAFTED)		
TITLE	SEE CHART	
DRAWING NAME	TAXI ASM CONN 14 M SLD	

APTIV
CONNECTION SYSTEMS
WARREN, OH
COPYRIGHT 2014 APTIV, ALL RIGHTS RESERVED.
THIS DRAWING IS THE PROPERTY OF APTIV AND CONTAINS APTIV CONFIDENTIAL INFORMATION. THE RECEIPT OR POSSESSION OF THIS DRAWING OR ITS REPRODUCTION OR ITS RELATED DATA WITH DATA, MAY NOT BE COMMUNICATED OR ANY CONTENT TO OTHERS, WITHOUT EXPRESS AUTHORIZATION, IS PROHIBITED.

DRAWING NUMBER							
13535119							
SIZE	SCALE	FORMAT SIZE	SHEET NO	SHEET NUMBER	REV	NUM	
A1x3	2:1	1 OF 2	1 OF 1	R	03	-	

PRINTED: 1/05/2022 9:01:03 Sheet 1 of 1
Time: 11:08:19 Date: 30-Jun-24
13535119