SYMBOL DEFINITION		
A DIMENSION WITHOUT AN INSPECTION REPORT SYMBOL ( ) DOES NOT REQUIRE INSPECTION. IT MAY BE CONTROLLED ON THE INDIVIDUAL COMPONENT DRAWING.	TOTAL NO OF INSPECTIONS REQUIRED	8
	LAST NO. USED	5

MISSING SYMBOLS
NO MISSING SYMBOL NUMBER

DWG STATUS DATE	STG	REV	N/P	CHG	ZONE	REVISION HISTORY	AUTH	DR	APVD 1	APVD 2
11MR22	R	01	-	-		CREATED PART DRAWING	447848		WAN	ZJ
16MR23	R	01	AA	-		OPTIMIZE DRAWING	449026		WAN	KEV

PLR AND NUT POSITION

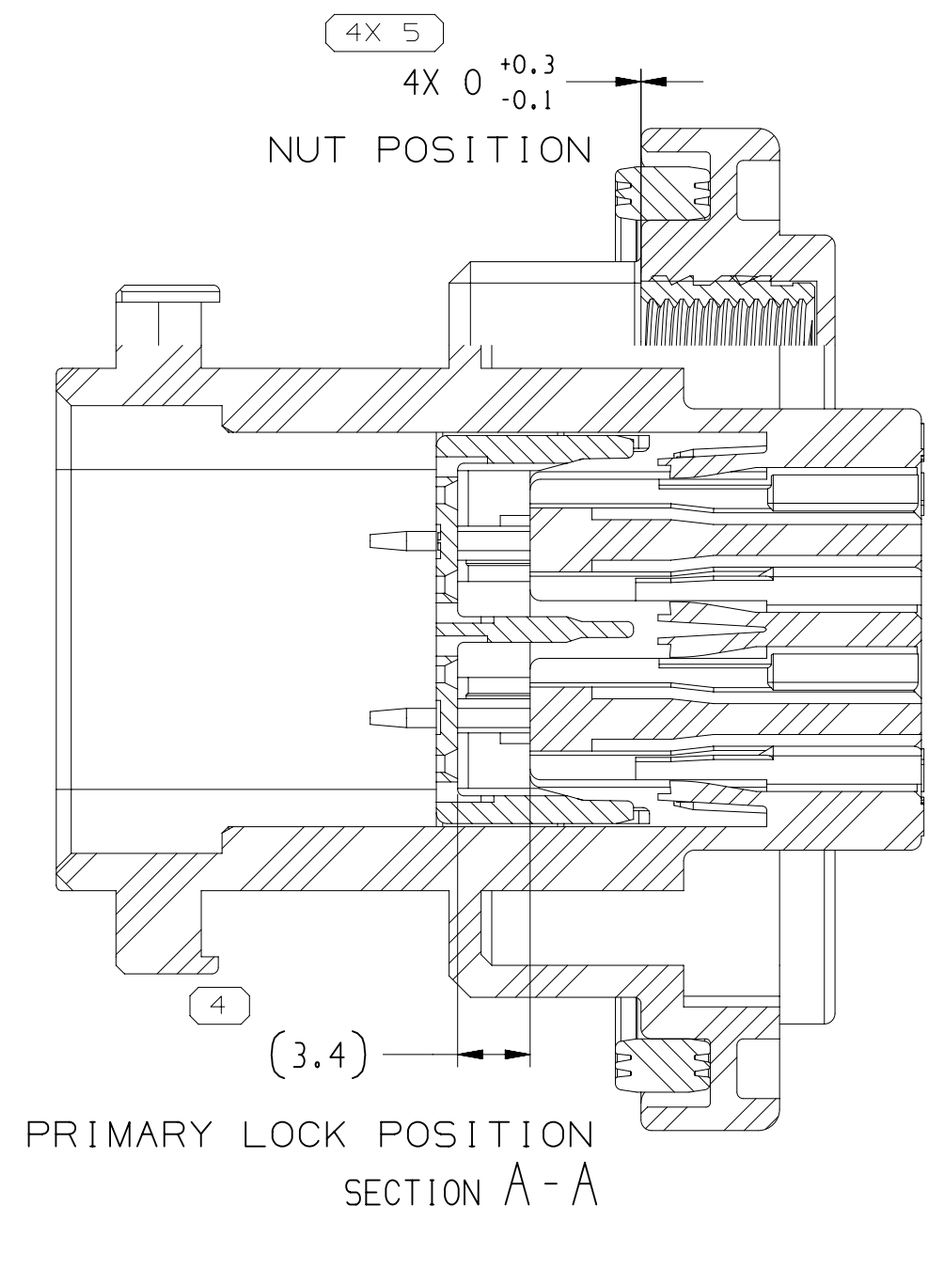

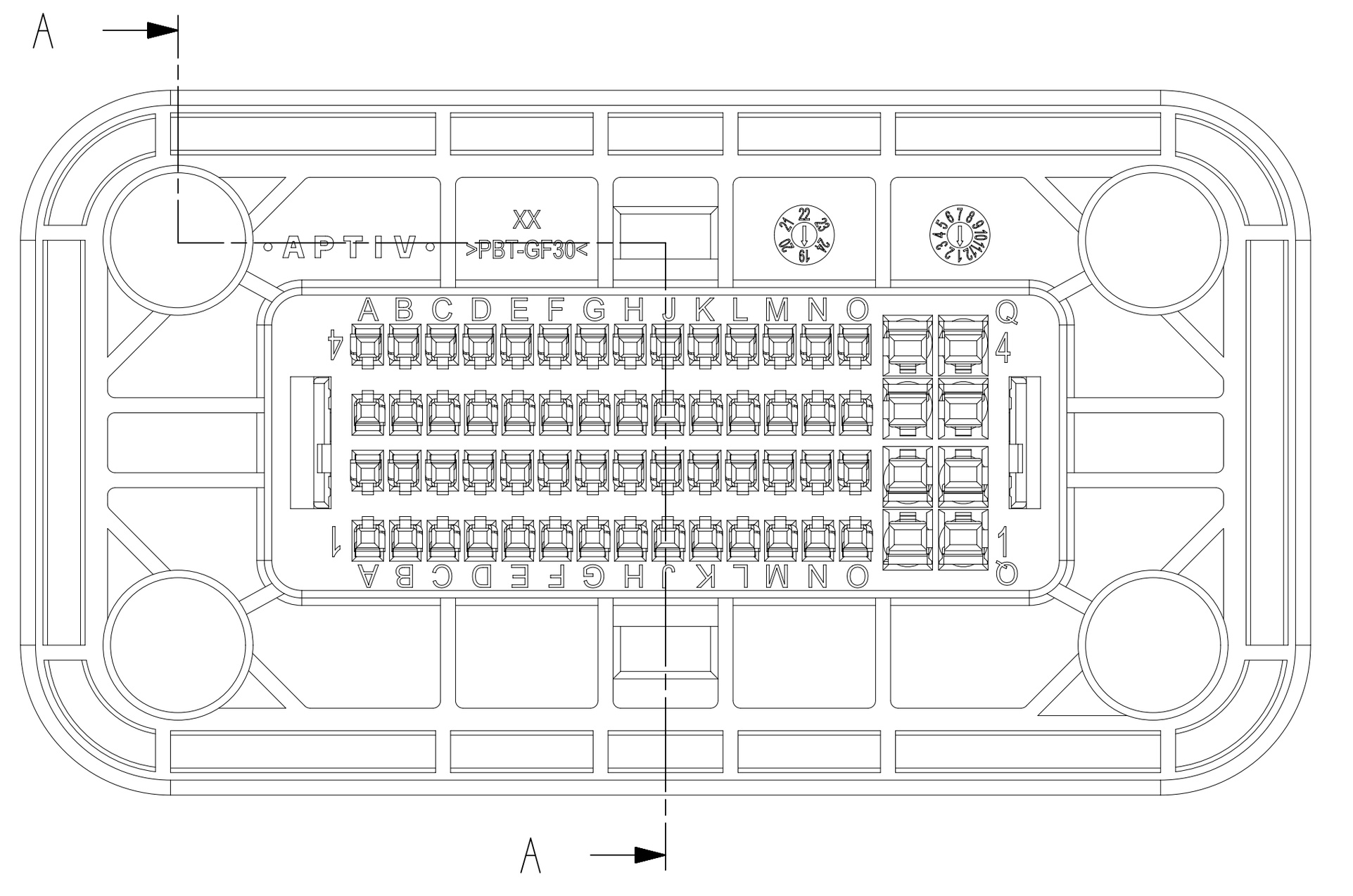

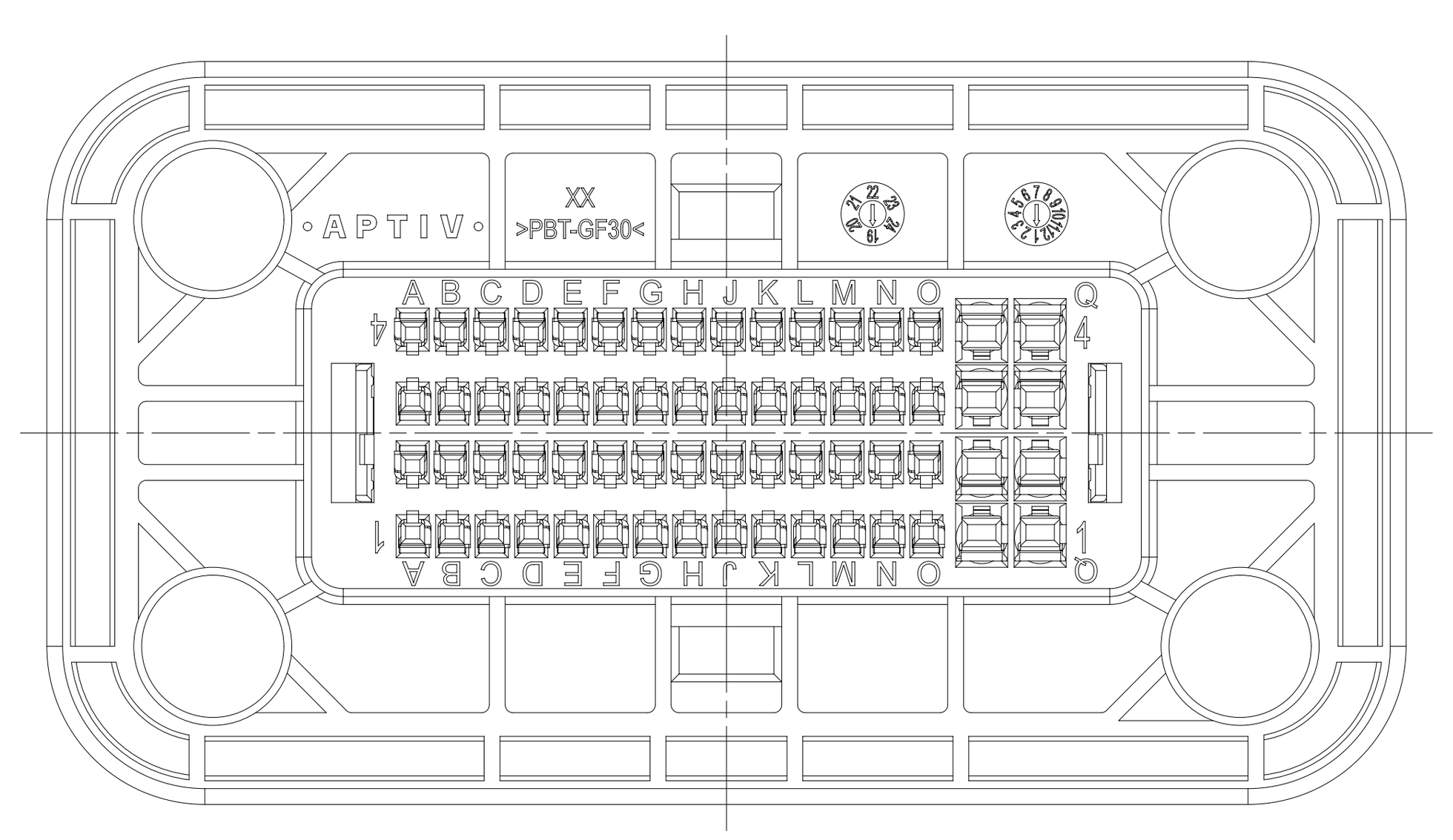

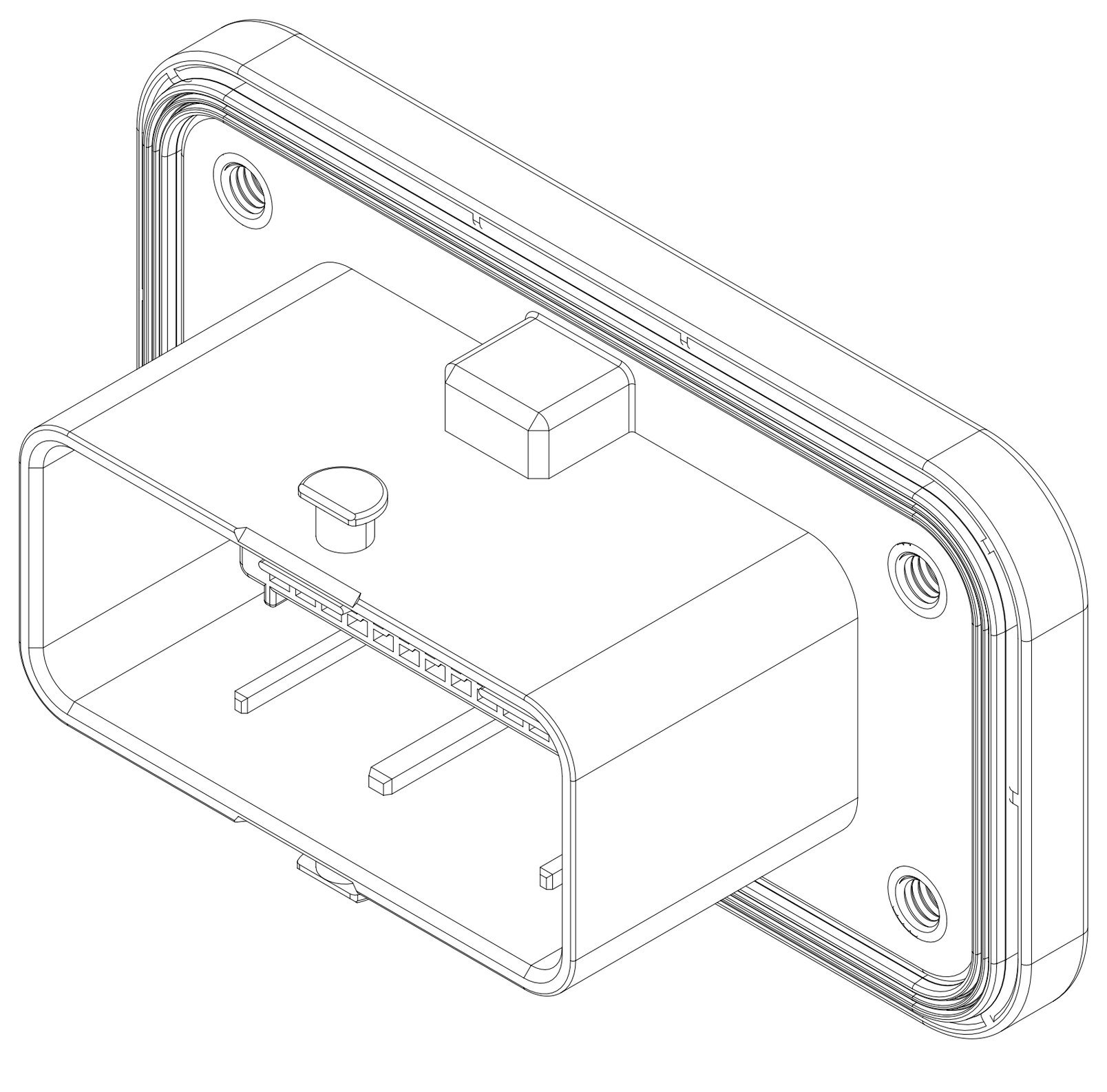

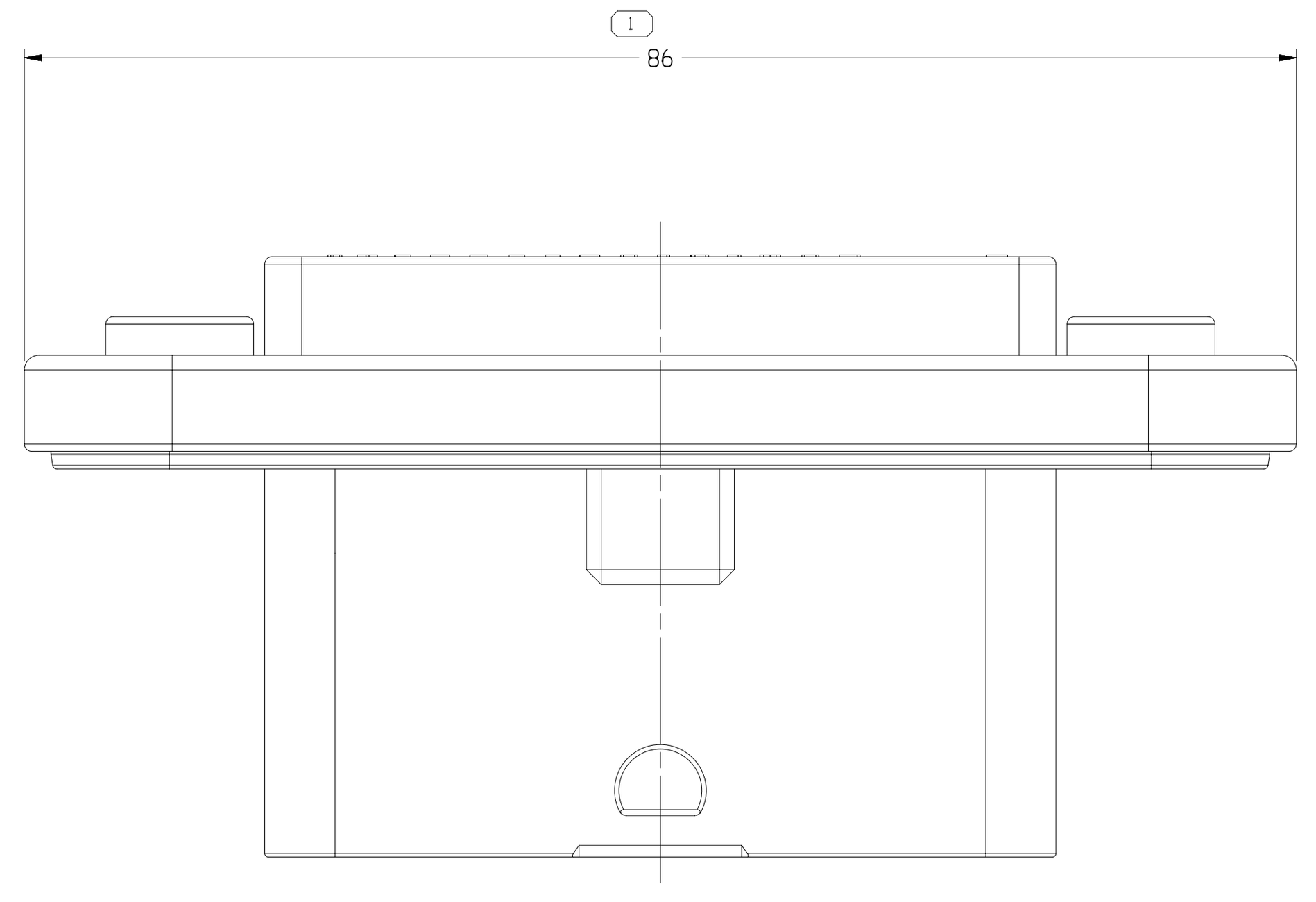

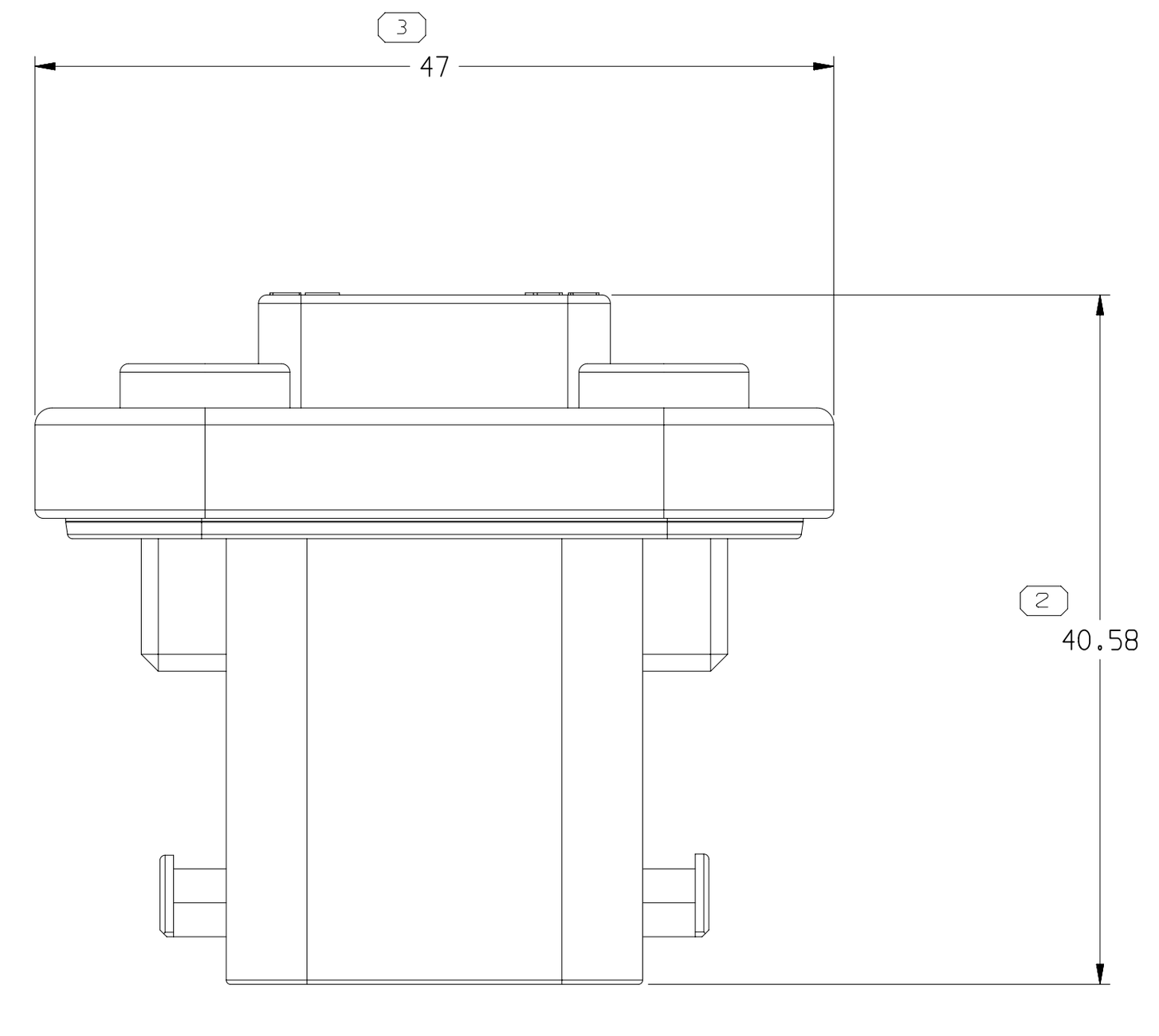

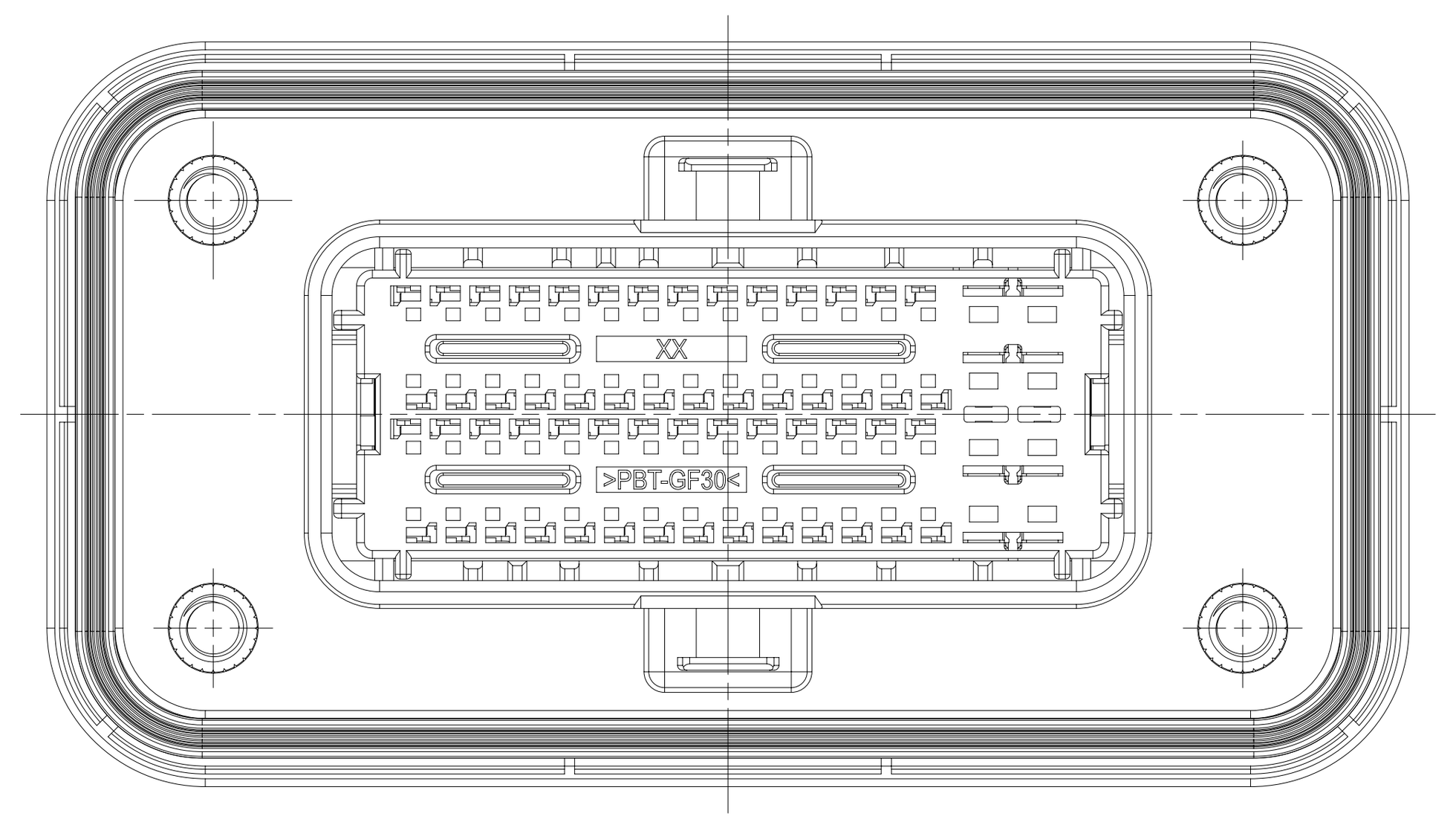

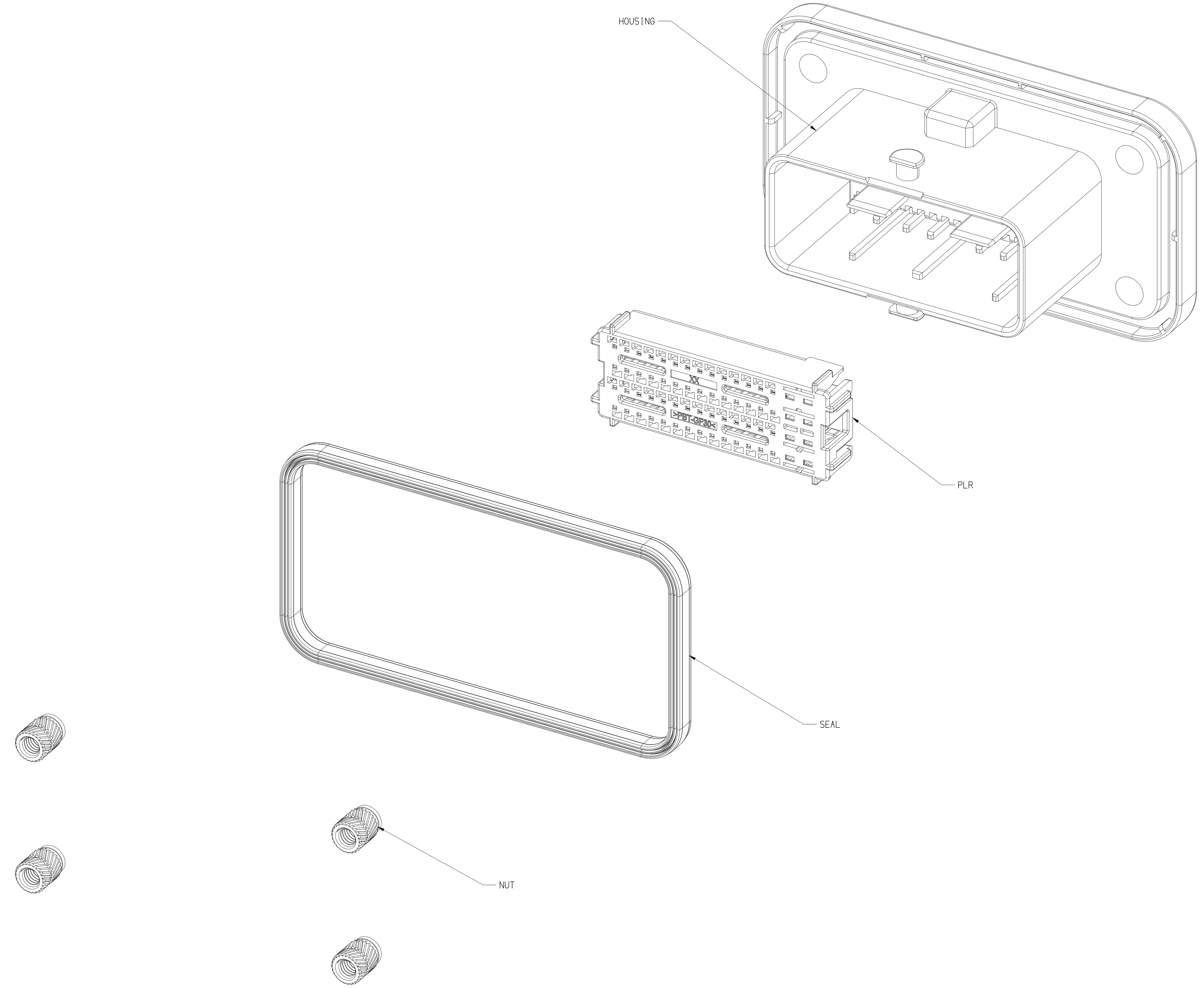

EXPLODED VIEW

NOTES

1. UNLESS OTHERWISE SPECIFIED AND/OR INDICATED:

   DIMENSIONS ARE TO FACE OF VIEW SHOWN AND AUTOMATICALLY ROUNDED BY COMPUTER FOR INSPECTION (SEE MATH MODEL FOR PRECISE DIMENSIONS). FOR ALL OTHER DIMENSIONS NOT SHOWN BUT REQUIRED FOR TOOL BUILD, SEE MATH MODEL FOR PRECISE TOOL PATH DATA

2. THE PART ACCEPTS THE FOLLOWING COMPONENTS OR EQUIVALENT: SEE TABLE
3. FOR APPLICATION DATA SEE APPLICATION DRAWING
4. REFERENCE CAVITY TERMINAL INFORMATION: SEE TABLE

1.5	GTS 1.5 (TYPE 3)	1.4-2.0	Sn	33510913	-
0.64	GTS 0.64 (TYPE 3)	0.35-0.5	Sn	33510990	-
TERMINAL SIZE	TERMINAL TYPE	WIRE SIZE (MM²)	PLATING	TERMINAL PART NUMBER	CABLE SEAL PART NUMBER

DRAWING NUMBER						
35432844						
SIZE A1x3	SCALE 3:1	FRAME NO 2 OF 1	SHEET NO 1 OF 1	STG R	REV 01	N/P AA

35429717	01	NUT, M4
35432849	01	SEAL, RED BRN
35432848	01	PLR, BLK
35432847	01	HOUSING, BLK
35432844	01	ASM 64W PASSTHROUGH
PART NO.	REV.	PART DESCRIPTION AND COLOR

DIMENSIONAL RANGE (MM)									CHART M
FROM	> 0	> 6	> 30	> 70	>120	>160	>200	>250	>315
TO	6	30	70	120	160	200	250	315	400
TOLERANCE UNLESS OTHERWISE SPECIFIED	±0.1	±0.2	±0.3	±0.4	±0.45	±0.55	±0.7	±0.85	±1.05

ANGULAR TOLERANCE ±1°

(2) PROCESS SENSITIVE DIMENSION

DIMENSIONS ENCLOSED IN ( ) INDICATE REFERENCE DIMENSIONS AND NO TOLERANCE LIMITS ARE ESTABLISHED

A LINE DRAWN THROUGH A PART NUMBER INDICATES THAT PHYSICAL PARTS ARE NOT AVAILABLE FOR ORDERING.

PART NUMBERS THAT DO NOT HAVE A LINE PRESENT INDICATE THAT PHYSICAL PARTS ARE AVAILABLE FOR ORDERING.

CONTACT APTIV SALES TO ASSURE AVAILABILITY OF PARTS.

DWG TYPE: PART DRAWING

STYLE

VOLUME (CM³): SEE CHART

DISTR CODE: D

UNLESS OTHERWISE SPECIFIED

THIS DOCUMENT IS IN ACCORDANCE WITH ASME Y14.5-2009. SEE APTIV ENGINEERING DESIGN STANDARD B6 2017 FOR ISO 1101:2004 RECONCILIATION REQUIREMENTS.

ALL DIMENSIONS ARE IN MILLIMETERS

REFERENCE

THIRD ANGLE PROJECTION

DO NOT SCALE

USE MATH DATA

CAD NX

·APTIV·

CONNECTION SYSTEMS

Chennai, India

COPYRIGHT 2022 APTIV. ALL RIGHTS RESERVED.

THIS DRAWING IS THE PROPERTY OF APTIV AND CONTAINS APTIV CONFIDENTIAL INFORMATION. THE REPRODUCTION, DISTRIBUTION AND UTILIZATION OF THIS DOCUMENT OR ITS RELATED CAD MATH DATA, AS WELL AS COMMUNICATION OF ANY CONTENT TO OTHERS, WITHOUT EXPRESS AUTHORIZATION, IS PROHIBITED.

		DATE
DR		
APVD1	WANG NIAN	11MR22
APVD2	KEVIN ZHOU	11MR22
APVD3	JONNY ZHENG	11MR22
APVD4		
APVD5		

SUBSTANCES OF CONCERN AND RECYCLED CONT10949001 10949001

MATERIAL: SEE CHART

DRAWING NAME: ASM CONN 64 M CTS 150 SLD

DRAWING NUMBER						
35432844						
SIZE A1x3	SCALE 3:1	FRAME NO 1 OF 1	SHEET NO 1 OF 1	STG R	REV 01	N/P AA

Date: 18-Apr-23 Time: 12:47:37