NOTA	SPECIFICATIONS
1	CONNECTEUR DOIT ETRE CONFORME AU CDC : 96 907 356 99 REV OR *MALE CONNECTOR ACCORDING TO PSA's SPECIFICATION :96 907 356 99 REV OR*
2	CONNECTEUR SUIVANT: *MALE CONNECTOR ACCORDING TO* -CLASSE DE TEMPERATURE T4 SELON B217050 REV C *TEMPERATURE CLASS T4 ACCORDING TO B217050 REV C* -CLASSE DE VIBRATION V3 SELON B217050 REV C *V3 VIBRATION CLASS ACCORDING TO B217050 REV C* -CLASSE ETANCHEITE E2 SELON B217050 REV C *SEALING CLASS E2 ACCORDING TO B217050 REV C*
3	PRECONISATION D'UTILISATION /*USER MANUAL* REF MVL: PU126 / *MVL'S REFERENCE: PU126* REF PSA:00949_10_01080 / *PSA'S REFERENCE:00949_10_01080*
4	ALVEOLE SUIVANT STE: 96 289 050 99 REV A *TERMINAL CAVITY ACCORDING TO: STE: 96 289 050 99 REV A*
5	CONNECTEUR ET POSITION ALVEOLE CONFORMES AU PLAN D'INTERFACE STE 96 339 622 99 REV L *MALE CONNECTOR AND CAVITY'S POSITION ACCORDING TO: INTERFACE DRAWING STE 96 339 622 99 REV L*
6	CONDUCTEUR SUIVANT STE B 25 1110 REV OR *WIRE ACCORDING TO STE B 25 1110 REV OR*
7	CONDITIONNEMENT SUIVANT NORME: E73 03 150G *PACKAGING ACCORDING TO STANDARD: E73 03 150G*
8	DIAMETRE DE L'ISOLANT DES FILS *WIRE INSULATION DIAMETER* :MINI=1.25 :MAXI=2.80
9	MASSE DU PRODUIT LIVRABLE : 10g *DELIVERY CONNECTOR WEIGHT : 10g*
10	EFFORT D'ACCOUPLEMENT PC/PL : 50N MAXI *MATING FORCE FEMALE/MALE CONNECTOR : 50N MAXI*
11	ACCROCHAGE SUIVANT STE 96 512 133 99 REV A *HOLDING DEVICE ACCORDING TO STE 96 512 133 99 REV A*
12	MARQUAGE SUR UN COTE UNIQUEMENT REFERENCE MVL + DATEUR ASSEMBLAGE (XXX : JOUR / YY : ANNEE / E : REGION) (03) *MARKING ON ONE SIDE ONLY* *MVL REFERENCE + ASSEMBLY DATE (XXX: DAY / YY : YEAR / E : REGION)*

TABLEAU CARACTERISTIQUES / PRESTATIONS ATTENDUES
TABLE OF CHARACTERISTICS / FUNCTIONAL FEATURES REQUESTED

LES COTES SERONT CONFIRMEES APRES REALISATION DES AMDECS PRODUIT ET PROCESS DES FOURNISSEURS DU PORTE-LANGUETTES
THE DIMENSIONS WILL BE CONFIRMED AFTER THE RESULT OF DFMEA AND PFMEA OF THE MALE CONNECTOR SUPPLIERS

N° DE LA CARACTERISTIQUE A GARANTIR POUR ASSURER LA PRESTATION *CHARACTERISTIC NBR TO GUARANTEE, IN ORDER TO ENSURE THE FUNCTIONAL FEATURE*	PRESTATION ATTENDUE *FUNCTIONAL FEATURES REQUEST*		
	BRANCHEMENT (GUIDAGE ET POLARISATION) *MATING (GUIDING AND POLARIZATION)*	CONTACT ELECTRIQUE *ELECTRICAL CONTINUITY*	ETANCHEITE *WATER TIGHTNESS*
1 to 15	X		
16 - 17 - 50		X	
20 - 21			X
48 to 49	X		

DWG STATUS DATE	STG	REV	N/P	CHG	ZONE	REVISION HISTORY	AUTH	DR	APVD 1	APVD 2
	R	01	-			FILE TRANSLATED FROM MVL SYSTEM				
	R	02	-			FILE TRANSLATED FROM MVL SYSTEM				
01FE16	R	03	-		B7 F12	REDRAWN IN NX DRAWING NUMBER PCC0676799 BECAME 33523024-CU502-S01 DELPHI REFERENCE ADDED IN THE TABLE NOTE 12 ADDED LOGO FCI BECAME LOGO DELPHI		P.BAL	S.ANU	L.DIA

REVISION HISTORY FROM PCC0676799 MVL
FOR 33523024-CU502 SEE TABLE ON THE TOP

A	-	-
	-	-
	-	-
	-	-
	-	INITIAL ISSUE
B	-	-
	-	-
	-	-
	-	-
	-	CHANGE DIMENSION NUMBER 24 & 31
C	-	-
	-	-
	-	UPDATE NOTA
	-	CHANGE TOLERANCE DIMENSION 18
	-	ADD DATING MARKS
D	-	-
	M 14	PSA REF NO. ADDED
	AE 12-16	DELPHI REFERENCE ADDED IN THE TABLE
	L 8-9	NOTE ADDED FOR REAR GRID
	-	KEYS OF POLARIZATION OF REAR GRID ARE SUPPRESSED
ECN-NO *NUMERO-ECN*	POSITION *POSITION*	CHANGE DESCRIPTION *MODIFICATION*

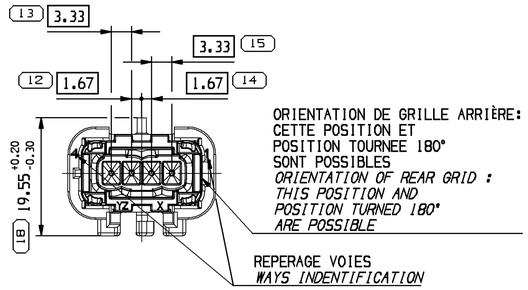

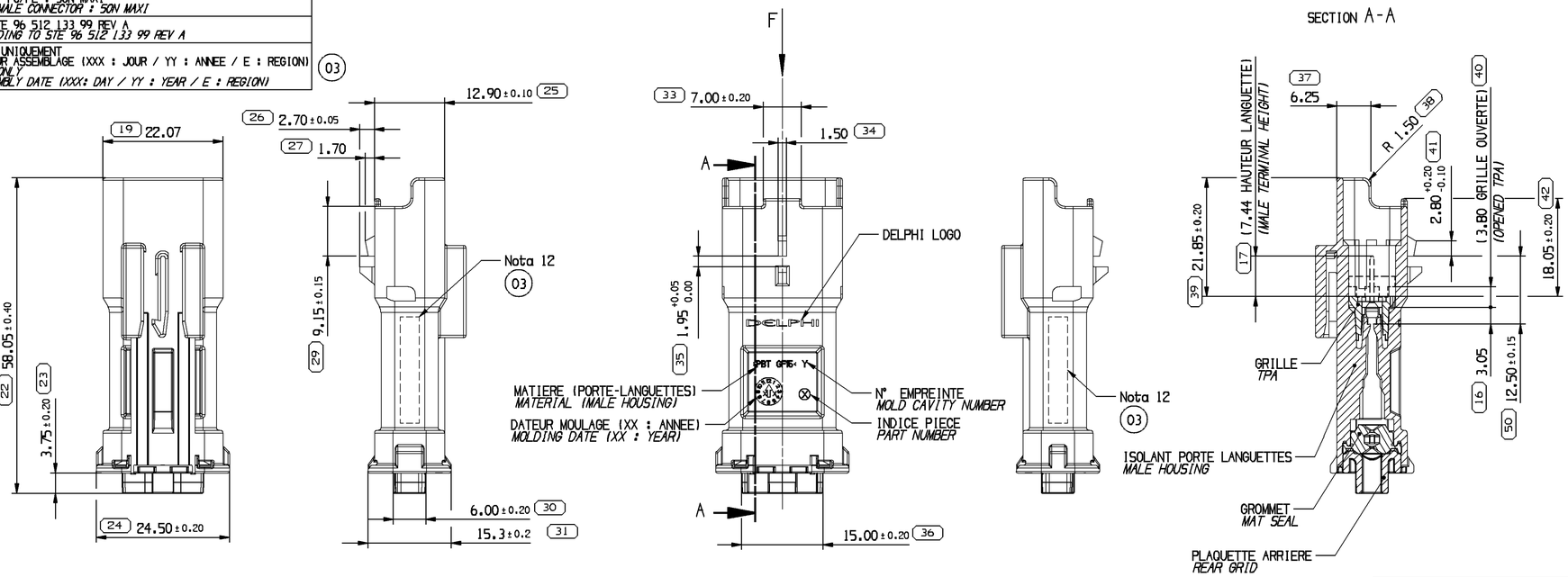

(48) 4.05 5.95 (49)			VUE F *VIEW F* TOLERANCES ±0.10 SCALE 1:1
codage ROUGE *RED coding*	codage VIOLET *PURPLE coding*	-	CODAGE COULEUR *COLOUR CODING*
96 741 284 80	96 741 285 80	-	REF P.S.A. *PSA'S REFERENCE*
33511732	33511733	-	REF DELPHI *DELPHI'S REFERENCE*
01	01	-	INDICE DELPHI *DELPHI'S REVISION*
F433700	F533700	-	REF. MVL SERIE *MVL SERIAL REF.*
^	^	-	INDICE *REVISION*

(10) 0.30 7.20 (11)	(8) 5.30 2.20 (9)	(6) 2.80 4.70 (7)	VUE F *VIEW F* TOLERANCES ±0.10 SCALE 1:1
codage GRIS *GREY coding*	codage BLEU *BLUE coding*	codage NOIR *BLACK coding*	CODAGE COULEUR *COLOUR CODING*
96 712 659 80	96 712 658 80	96 712 657 80	REF P.S.A. *PSA'S REFERENCE*
33502175	33511731	33502133	REF DELPHI *DELPHI'S REFERENCE*
01	01	01	INDICE DELPHI *DELPHI'S REVISION*
F333700	F233700	F133700	REF. MVL SERIE *MVL SERIAL REF.*
^	^	^	INDICE *REVISION*

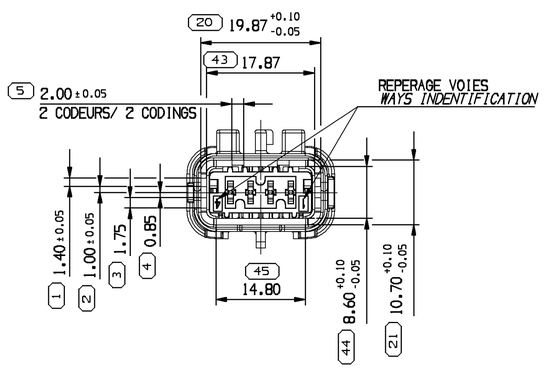

VOLUME MONTE SUR PC
OVERALL DIMENSION MATTED ON FEMALE CONNECTOR

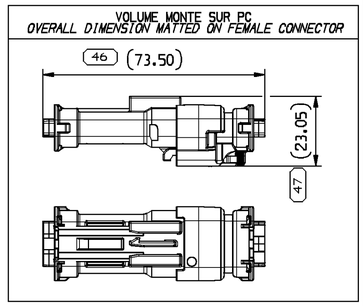

ISOLANT PORTE-LANGUETTES *MALE HOUSING*	S663700	33523017	PBT 15% FV *PBT 15% GF*	NOIR *BLACK*
	S763700	33523020		BLEU *BLUE*
	S863700	33523019		GRIS *GREY*
	S963700	33523016		ROUGE *RED*
	S073700	33523018		VIOLET *PURPLE*
GRILLE *TPA*	S314700	33523014	PBT 15% FV *PBT 15% GF*	JAUNE *YELLOW*
GROMMET *MAT SEAL*	S293700	33501744	SILICONE 4% D'HUILE DURETE 35±5 SHORE A	GRIS *GREY*
PLAQUETTE ARRIERE *REAR GRID*	S383700	33512021	PBT 15% FV *PBT 15% GF*	NOIR *BLACK*
DESIGNATION *DESCRIPTION*	REF. MVL SERIE *MVL SERIAL REF.*	REF. DELPHI SERIE *DELPHI SERIAL REF.*	MATIERE *MATERIAL*	COULEUR *COLOUR*

3D VIEW

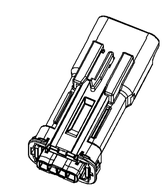

SCALE 1:1
CODAGE NOIR REPRESENTE
BLACK CODING DRAWN

A ——— LINE DRAWN THROUGH A PART NUMBER INDICATES THAT PHYSICAL PARTS ARE NOT AVAILABLE FOR ORDERING.

PART NUMBERS THAT DO NOT HAVE A LINE PRESENT INDICATE THAT PHYSICAL PARTS ARE AVAILABLE FOR ORDERING.

CONTACT DELPHI SALES TO ASSURE AVAILABILITY OF PARTS.

LA LIGNE ——— TRACÉE SUR LA RÉFÉRENCE PIÈCE INDIQUE QUE LA PIÈCE N'EST PAS DISPONIBLE À LA COMMANDE.

LES RÉFÉRENCES PIÈCES QUI NE SONT PAS BARRÉES INDIQUENT QUE CELLES-CI SONT DISPONIBLES PHYSIQUEMENT POUR ÊTRE COMMANDÉES.

CONTACTER LE SERVICE COMMERCIAL DE DELPHI POUR S'ASSURER DE LA DISPONIBILITÉ DES PIÈCES

SHARP CORNER TOLERANCE

DIM TO CHECK
COTES A VERIFIER
( ) DIM FOR HELP
COTES POUR INFO
THEORETIC DIM
COTES THEORIQUES

DWG TYP
PART DRAWING

WEIGHT (GR)
SEE NOTE 9

VOLUME (CM³)

ROUTING

DISTR CODE
D

UNLESS OTHERWISE SPECIFIED

GENERAL TOLERANCES ACCORDING TO:

±0.1 ±2°

GD&T ACCORDING TO:

REFERENCE
pcc0676799

FIRST ANGLE PROJECTION

DO NOT SCALE
USE MATH DATA

DELPHI

DELPHI PACKARD ELECTRICAL/ELECTRONIC ARCHITECTURE
Chennai, India

COPYRIGHT 2014 DELPHI CORPORATION AND/OR ITS AFFILIATES.
ALL RIGHTS RESERVED.
REVISED 2016
THIS DRAWING IS THE PROPERTY OF DELPHI CORPORATION AND CONTAINS DELPHI CONFIDENTIAL INFORMATION. THE REPRODUCTION, DISTRIBUTION AND UTILIZATION OF THIS DOCUMENT OR ITS RELATED CAD MATH DATA, AS WELL AS COMMUNICATION OF ANY CONTENT TO OTHERS, WITHOUT EXPRESS AUTHORIZATION, IS PROHIBITED.

CE PLAN EST LE PROPRIETE DE DELPHI CORPORATION ET CONTIENT DES INFORMATIONS DELPHI CONFIDENTIELLES. LA REPRODUCTION, LA DISTRIBUTION ET L'UTILISATION DE CE DOCUMENT OU DE SES DONNEES MATHEMATIQUES CAD, AINSI QUE LA COMMUNICATION DE TOUT CONTENU À AUTRUI, SANS AUTORISATION EXPRESSE EST INTERDITE.

		DATE
DR	A.jan SWAMY	04FE10
APVD1	S LACOTE	08AU14
APVD2	Patrice CAPPE	08AU14
APVD3	Pascal MENARD	08AU14
APVD4		
APVD5		

SUBSTANCES OF CONCERN AND RECYCLED CONTENT PER DELPHI 10949001
MATIERES PROSCRITES ET CONTENU RECYCLABLE SELON DELPHI 10949001

MATERIAL
SEE TABLE

DRAWING NAME
4-WAY MALE SEALED CONNECTOR

SENSOMATE SICMA 1.5

DRAWING NUMBER
33523024

SIZE	SCALE	FRAME NO	SHEET NO	STG	REV	N/P
A1	2:1	1 OF 1	1 OF 1	R	03	-

Part: 33523024
Part: 33523024-CU502-S01
Date: 10-May-16 Time: 15:47