SYMBOL DEFINITION		
A DIMENSION WITHOUT AN INSPECTION REPORT SYMBOL (4) DOES NOT REQUIRE INSPECTION. IT MAY BE CONTROLLED ON THE INDIVIDUAL COMPONENT DRAWING.	TOTAL NO OF INSPECTIONS REQUIRED	8
	LAST NO. USED	5

MISSING SYMBOLS

NO MISSING SYMBOL NUMBER

DWG STATUS											
DATE	STG	REV	N/P	CHG	ZONE	REVISION HISTORY	AUTH	DR	APVD1	APVD2
13AP20	R	01	-	-		CREATED ASSEMBLY DRAWING	445312		HAN	PRA
09MY22	R	01	AA	-	-	DIM WAS UPDATED	447848	KAN	BER	NIA
21JY23	R	01	AB	-	-	OPTIMIZE DRAWING	448873	WN	KEV	JNY

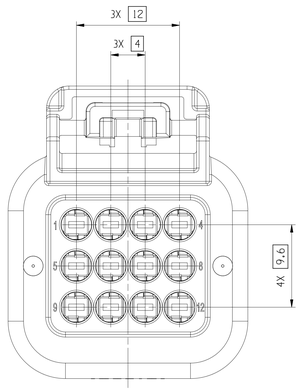

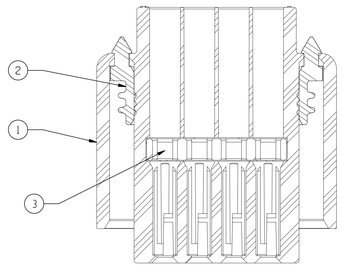

SECTION A - A

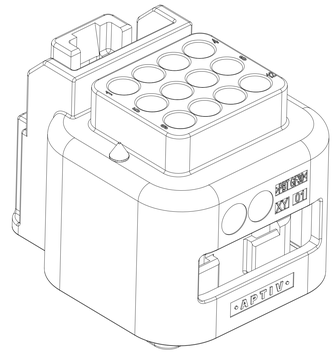

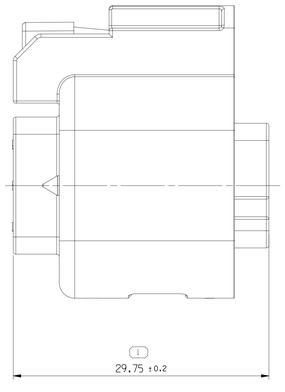

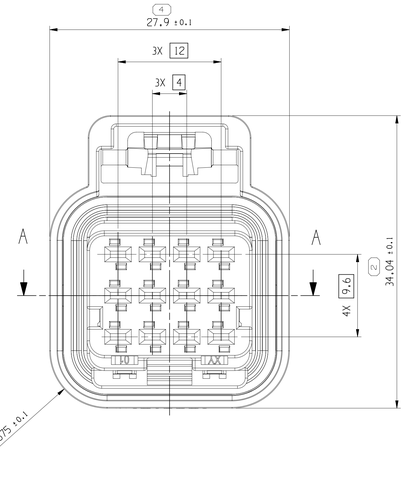

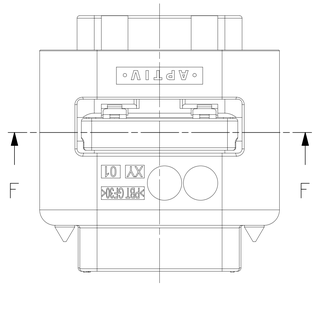

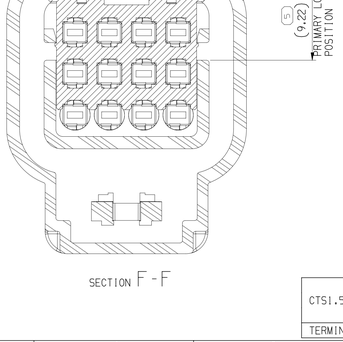

SECTION F - F

NOTES

1. UNLESS OTHERWISE SPECIFIED AND/OR INDICATED:

   DIMENSIONS ARE TO FACE OF VIEW SHOWN AND AUTOMATICALLY ROUNDED BY COMPUTER FOR INSPECTION (SEE MATH MODEL FOR PRECISE DIMENSIONS). FOR ALL OTHER DIMENSIONS NOT SHOWN BUT REQUIRED FOR TOOL BUILD, SEE MATH MODEL FOR PRECISE TOOL PATH DATA.

2. MATING ASM P/N: 35421456.

3. FOR APPLICATION DATA SEE THE APPLICATION DRAWING.

REP.	QTY	DESIGNATION	MATERIAL	APTIV P/N
1.3	1	TPA	PBT GF30 BLK	35421450
1.2	1	CONNECTOR SEAL	ELAS VMQ SELF-LUB SOLID RED	35421446
1.1	1	12 WAY FEMALE HOUSING	PBT GF30 BLK	35421223
1	1	12 WAY FEMALE ASSEMBLY	---	35421222

TERMINAL TYPE	PLATING	TERMINAL PART NUMBER	WIRE SIZE (MM^2)	CABLE SEAL PART NUMBER
CTS1.5 Female	SN	15432208	0.22-0.35	15327913
		15432210	0.5-0.75	15327918
		15432212	1.0-1.5	15339412

DIMENSIONAL RANGE (MM)									CHART M
FROM	> 0	> 6	> 30	> 70	>120	>160	>200	>250	>315
TO	6	30	70	120	160	200	250	315	400
TOLERANCE UNLESS OTHERWISE SPECIFIED	±0.1	±0.2	±0.3	±0.4	±0.45	±0.55	±0.7	±0.85	±1.05
ANGULAR TOLERANCE ±1°									

(4) PROCESS SENSITIVE DIMENSION

DIMENSIONS ENCLOSED IN ( ) INDICATE REFERENCE DIMENSIONS, AND NO TOLERANCE LIMITS ARE ESTABLISHED.

A LINE DRAWN THROUGH A PART NUMBER INDICATES THAT PHYSICAL PARTS ARE NOT AVAILABLE FOR ORDERING.

PART NUMBERS THAT DO NOT HAVE A LINE PRESENT INDICATE THAT PHYSICAL PARTS ARE AVAILABLE FOR ORDERING.

CONTACT APTIV SALES TO ASSURE AVAILABILITY OF PARTS.

DELPHI

CONNECTION SYSTEMS

Anting, China

COPYRIGHT 2023 APTIV. ALL RIGHTS RESERVED.

THIS DRAWING IS THE PROPERTY OF APTIV AND CONTAINS APTIV CONFIDENTIAL INFORMATION. THE REPRODUCTION, DISTRIBUTION AND UTILIZATION OF THIS DOCUMENT OR ITS RELATED CAD MATH DATA, AS WELL AS COMMUNICATION OF ANY CONTENT TO OTHERS, WITHOUT EXPRESS AUTHORIZATION, IS PROHIBITED.

DWG TYPE: CUSTOMER PART DRAWING

STYLE

VOLUME (CM³) | DISTR CODE

UNLESS OTHERWISE SPECIFIED

THIS DOCUMENT IS IN ACCORDANCE WITH ASME Y14.5-2009. SEE APTIV ENGINEERING DESIGN STANDARD R6 2017 FOR ISO 10112:2004 RECONCILIATION REQUIREMENTS.

ALL DIMENSIONS ARE IN MILLIMETERS

REFERENCE

		DATE
DR		
APVD1	WANG NIAN	21JY23
APVD2	KEVIN ZHOU	21JY23
APVD3	JONNY ZHENG	21JY23
APVD4		
APVD5		

SUBSTANCES OF CONCERN AND RECYCLED CONT[0949001] [0949001]

MATERIAL: SEE TABLE

DRAWING NAME: ASM CONN 12 F CTS 150 SLD

THIRD ANGLE PROJECTION

DO NOT SCALE

USE MATH DATA

DRAWING NUMBER: 35421222

SIZE	SCALE	FRAME NO	SHEET NO	STG	REV	N/P
A0	3:1	1 OF 1	1 OF 1	R	01	AB

User: KAPPS
Plot By: 35421222_C01.prt
Date: 21-Jul-23 Time: 11:12:25