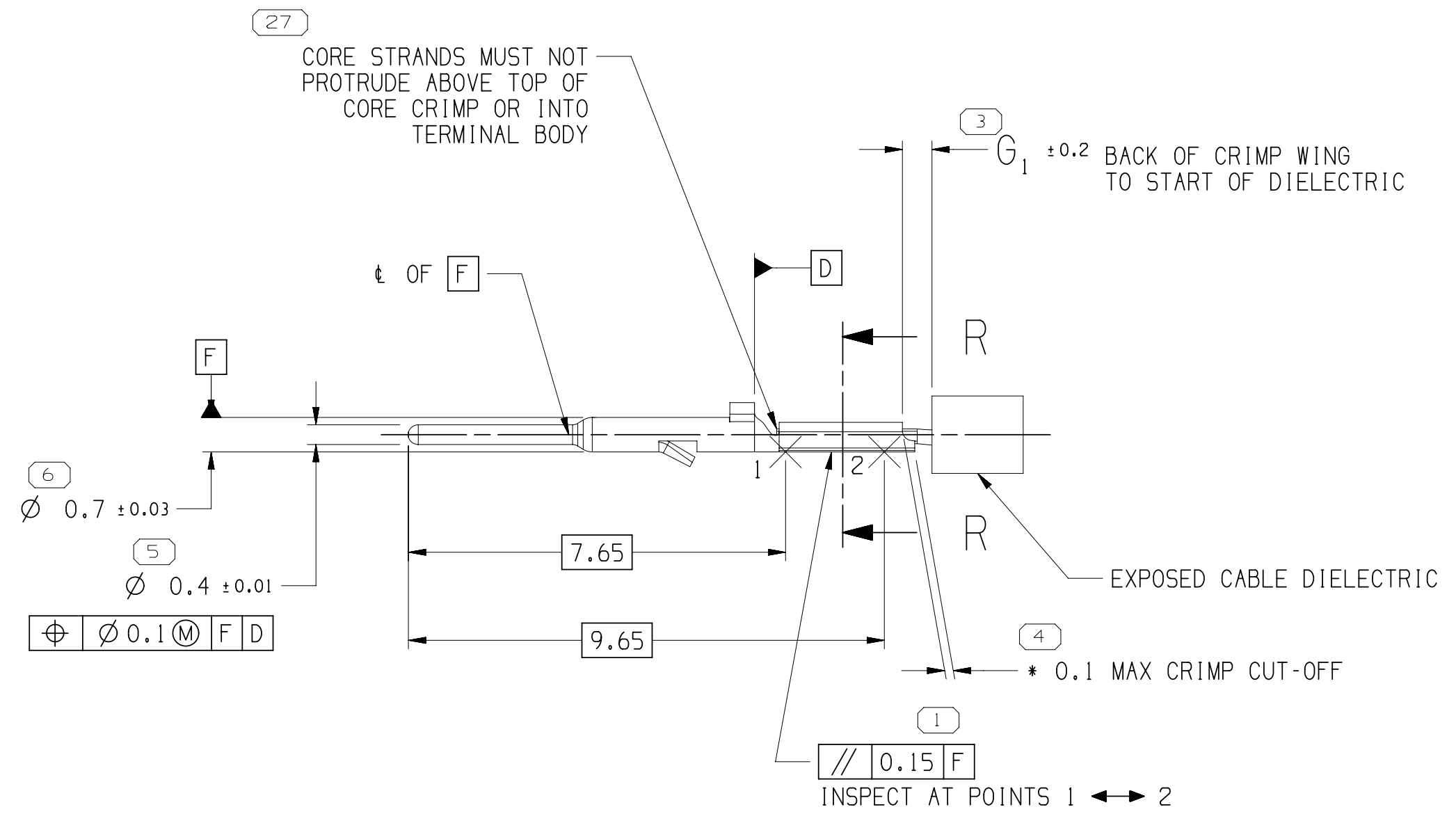
27
CORE STRANDS MUST NOT PROTRUDE ABOVE TOP OF CORE CRIMP OR INTO TERMINAL BODY
3
G_1 ±0.2 BACK OF CRIMP WING TO START OF DIELECTRIC
℄ OF F
D
F
R
R
6
Ø 0.7 ±0.03
5
Ø 0.4 ±0.01
⌖ Ø0.1Ⓜ F D
7.65
9.65
1
2
EXPOSED CABLE DIELECTRIC
4
* 0.1 MAX CRIMP CUT-OFF
1
// 0.15 F
INSPECT AT POINTS 1 ←→ 2

INNER TERMINAL, CABLE CORE ALIGNMENT & POSITION

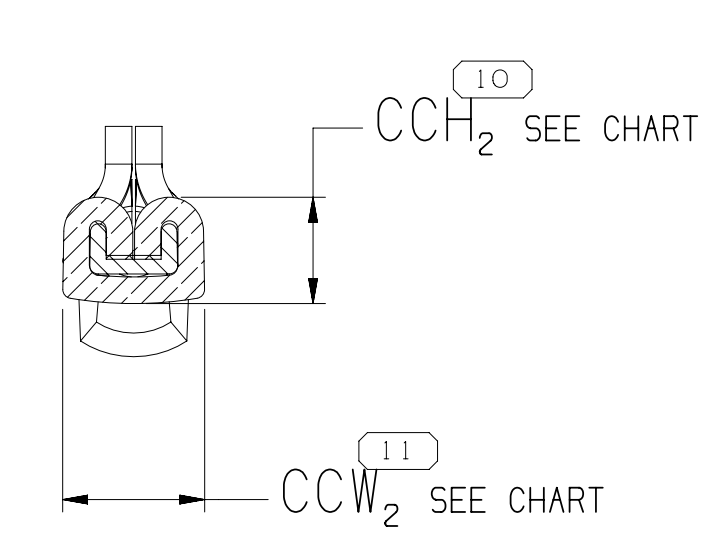
10
CCH_2 SEE CHART
11
CCW_2 SEE CHART

SECTION R-R

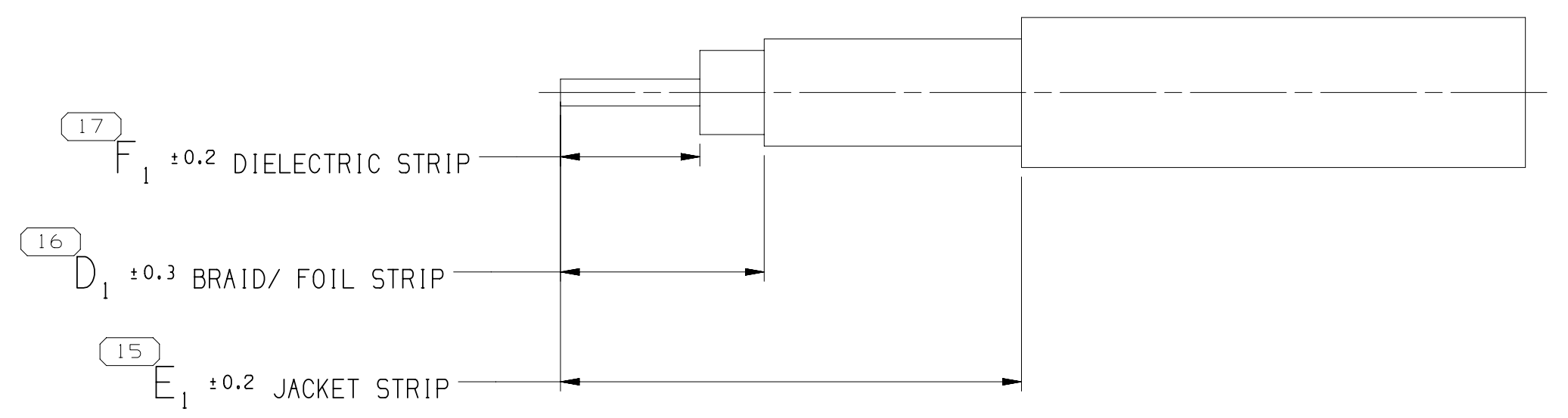
17
F_1 ±0.2 DIELECTRIC STRIP
16
D_1 ±0.3 BRAID/ FOIL STRIP
15
E_1 ±0.2 JACKET STRIP

CABLE PREP

QUALITY CUSTOMER INTERFACE (QCI)	
DIMENSIONS LISTED BELOW (BY INSPECTION SYMBOL NUMBER) MUST BE INCLUDED IN THE PROCESS CONTROL PLAN FOR THIS PART	
INSPECTION SYMBOL	ZONE
3	L19
7	F16
8	C8
13	G6
18	B19
19	G5
22	B12
24	F16
26	B17
27	M21

SYMBOL DEFINITION		
A DIMENSION WITHOUT AN INSPECTION REPORT SYMBOL ⬭ DOES NOT REQUIRE INSPECTION. IT MAY BE CONTROLLED ON THE INDIVIDUAL COMPONENT DRAWING.	TOTAL NO OF INSPECTIONS REQUIRED	32
	LAST NO. USED	32

MISSING SYMBOLS
NO MISSING SYMBOL NUMBER

DWG STATUS DATE	STG	REV	N/P	CHG	ZONE	REVISION HISTORY	AUTH	DR	APVD 1	APVD 2
31OC22	R	01	-	-		35601266 WAS PE506182; 35601267 WAS PE506183; 35700149 WAS PE531076; 35700150 WAS PE531077; 35700151 WAS PE531078; ALL PARTS - RELEASED PART DRAWING	558865	ESC	ESC	RK
15JN23	R	02	-	-		ALL PARTS - ADDED DIMS #13, 18, 19, 26 & 27 TO QCI CHART, UPDATED DIM #23 ("MUST" WAS "MAY") AND REMOVED DIM #1 FROM QCI CHART	560713	GLG	JGO	RK
31OC23	R	03	-	-		ALL PARTS - NAME DESCRIPTION WAS ASM TERM M MINI COAX SN SEALED	562263	JAA	JAA	RDK

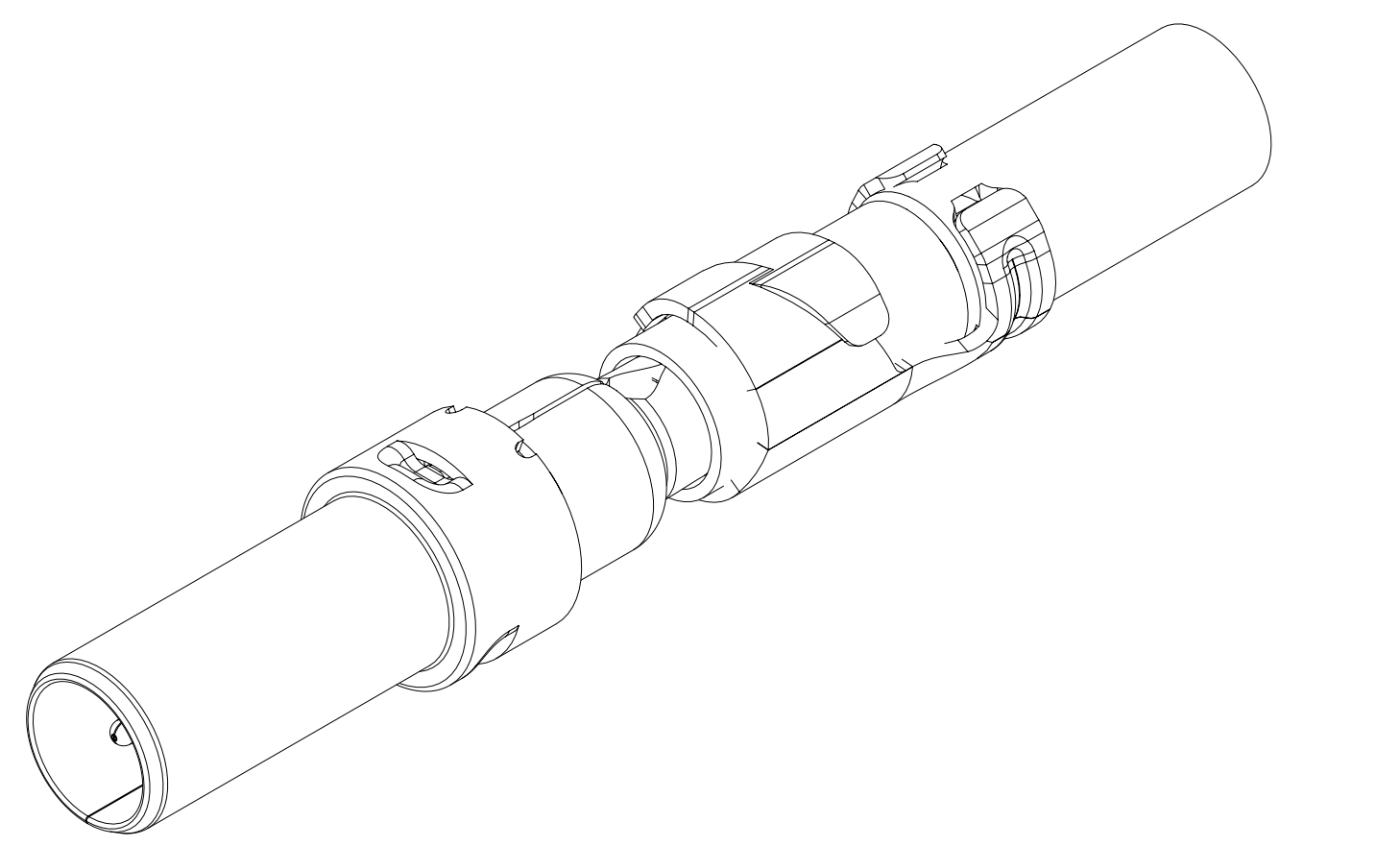

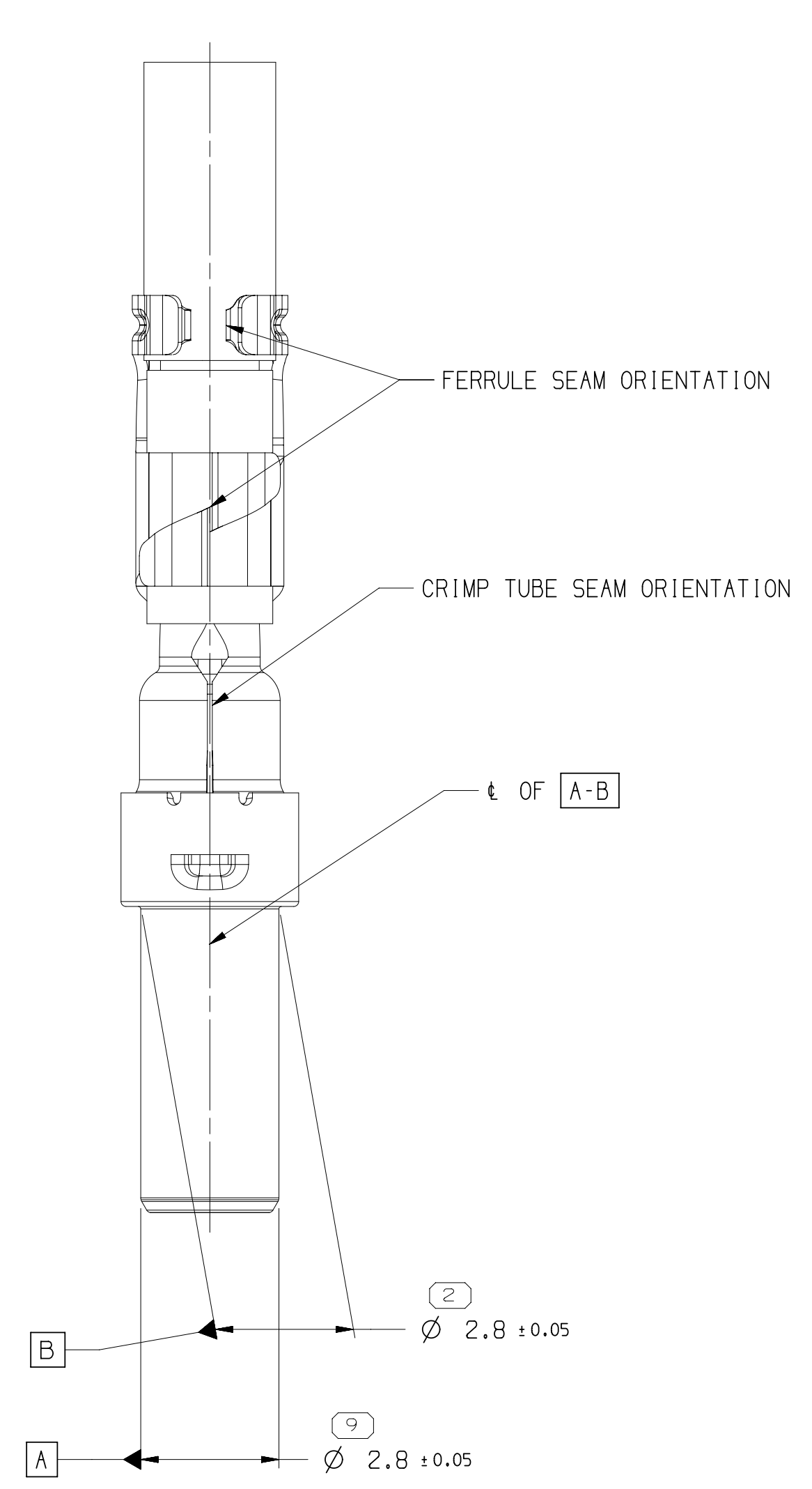
FERRULE SEAM ORIENTATION
CRIMP TUBE SEAM ORIENTATION
℄ OF A-B
2
Ø 2.8 ±0.05
B
9
Ø 2.8 ±0.05
A

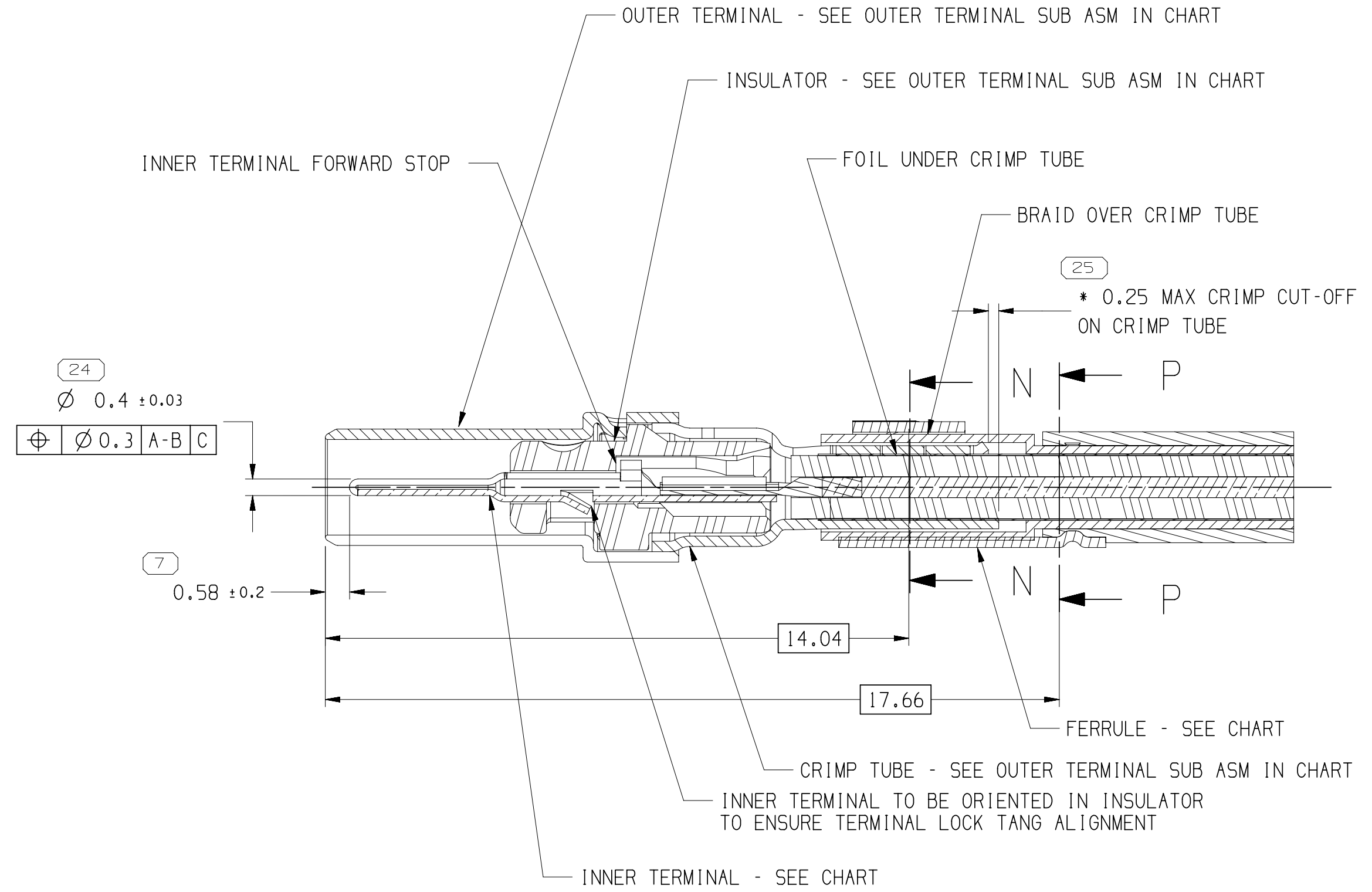
OUTER TERMINAL - SEE OUTER TERMINAL SUB ASM IN CHART
INSULATOR - SEE OUTER TERMINAL SUB ASM IN CHART
INNER TERMINAL FORWARD STOP
FOIL UNDER CRIMP TUBE
BRAID OVER CRIMP TUBE
25
* 0.25 MAX CRIMP CUT-OFF ON CRIMP TUBE
N
P
N
P
24
Ø 0.4 ±0.03
⌖ Ø0.3 A-B C
7
0.58 ±0.2
14.04
17.66
FERRULE - SEE CHART
CRIMP TUBE - SEE OUTER TERMINAL SUB ASM IN CHART
INNER TERMINAL TO BE ORIENTED IN INSULATOR TO ENSURE TERMINAL LOCK TANG ALIGNMENT
INNER TERMINAL - SEE CHART

SECTION K-K

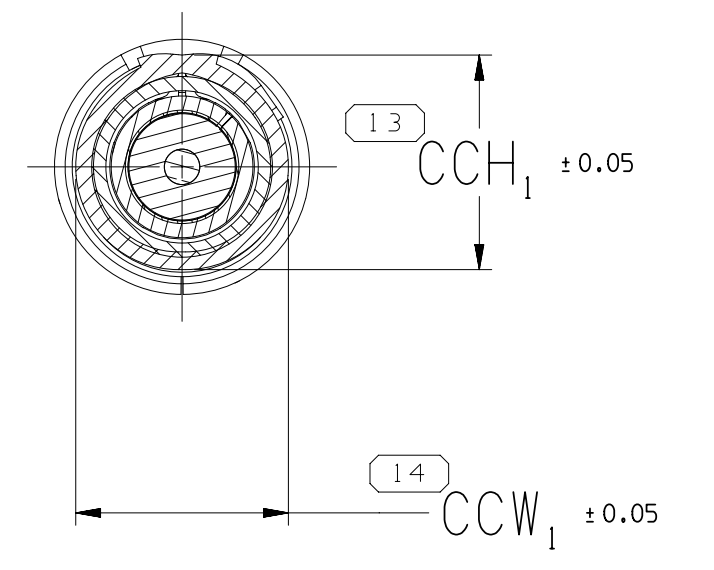
13
CCH_1 ±0.05
14
CCW_1 ±0.05

SECTION N-N

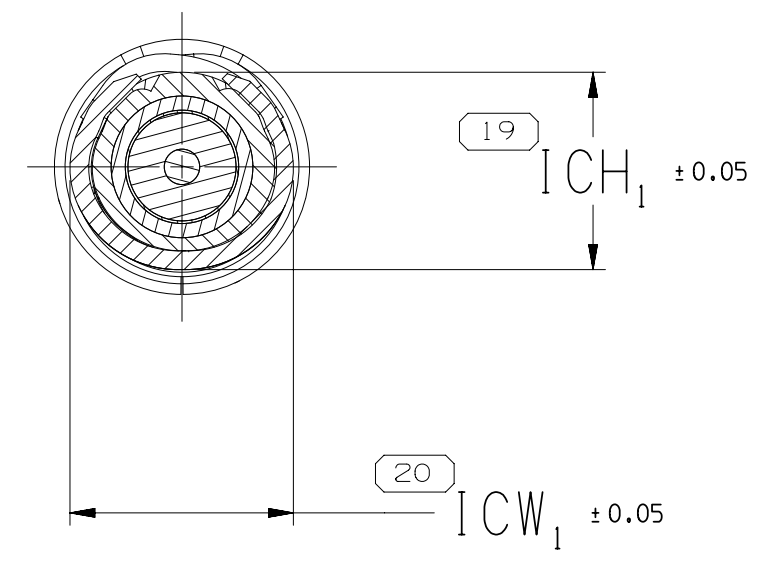
19
ICH_1 ±0.05
20
ICW_1 ±0.05

SECTION P-P

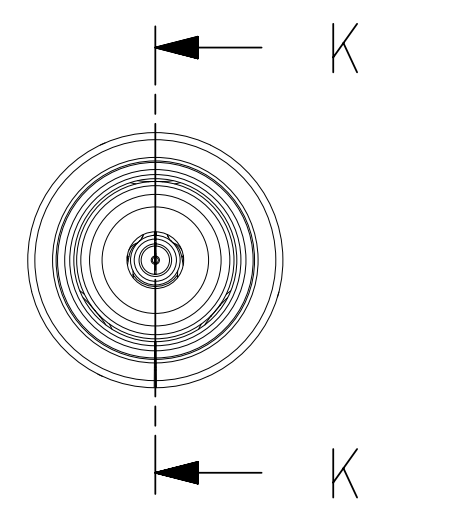

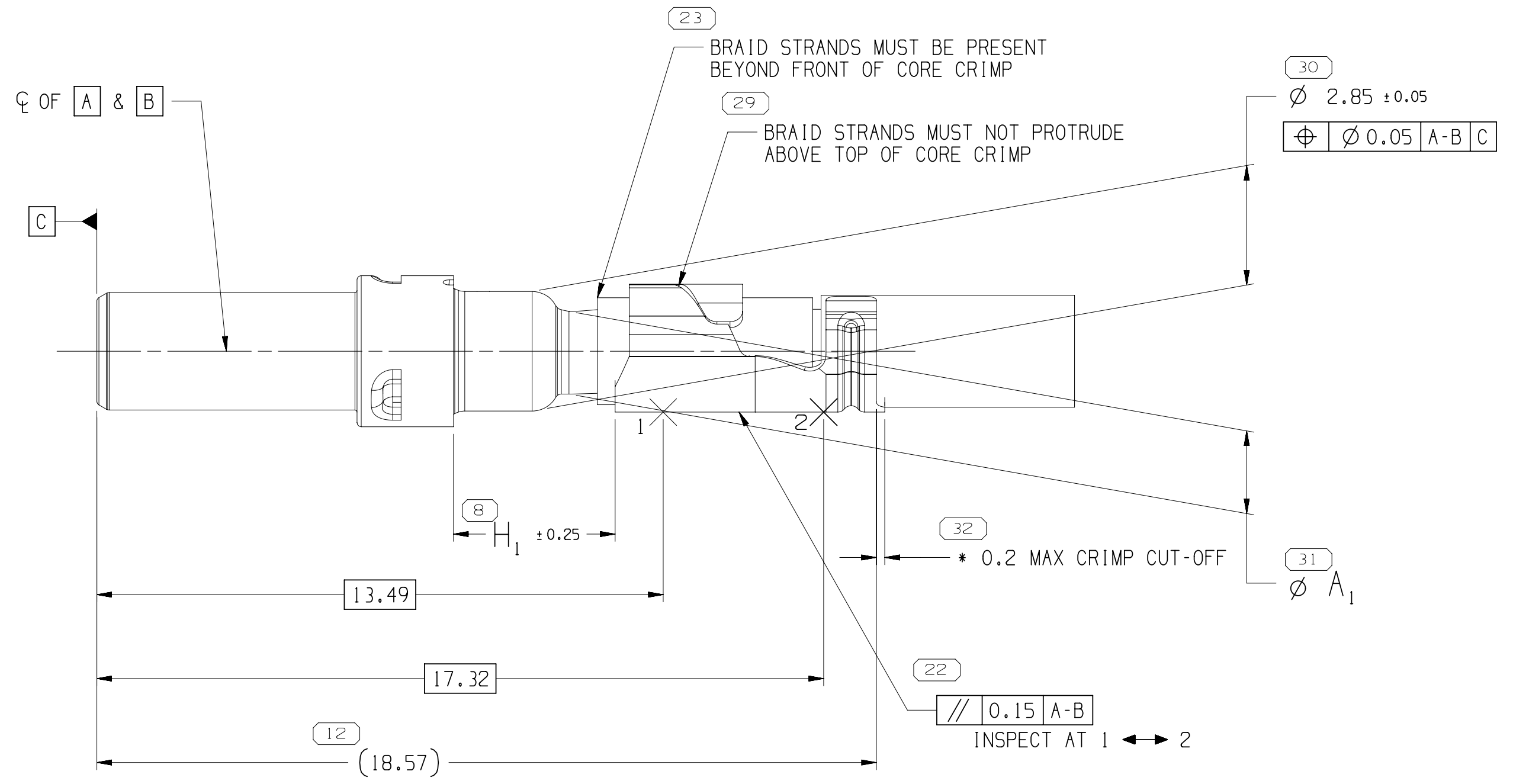
℄ OF A & B
C
23
BRAID STRANDS MUST BE PRESENT BEYOND FRONT OF CORE CRIMP
29
BRAID STRANDS MUST NOT PROTRUDE ABOVE TOP OF CORE CRIMP
30
Ø 2.85 ±0.05
⌖ Ø0.05 A-B C
1
2
8
H_1 ±0.25
32
* 0.2 MAX CRIMP CUT-OFF
31
Ø A_1
13.49
17.32
22
// 0.15 A-B
INSPECT AT 1 ←→ 2
12
(18.57)

TYPE 101

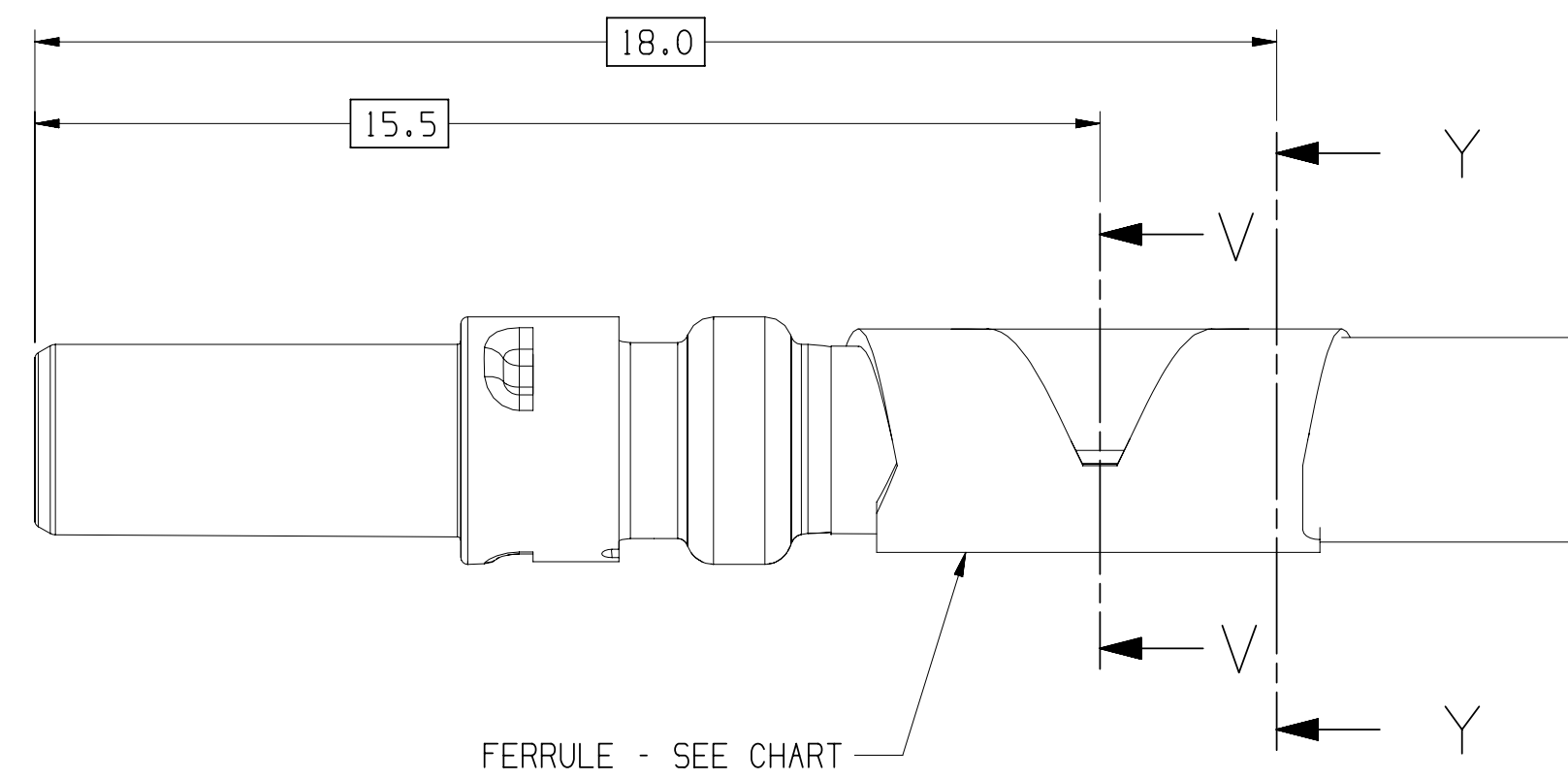
18.0
15.5
Y
V
V
Y
FERRULE - SEE CHART

TYPE 102
SAME AS TYPE 101
EXEPT AS SHOWN

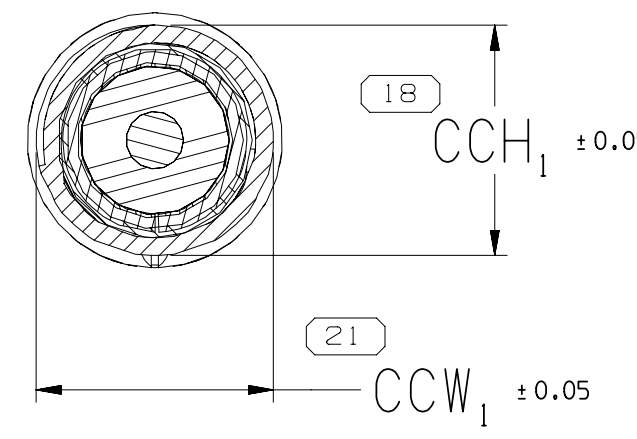
18
CCH_1 ±0.05
21
CCW_1 ±0.05

SECTION V-V

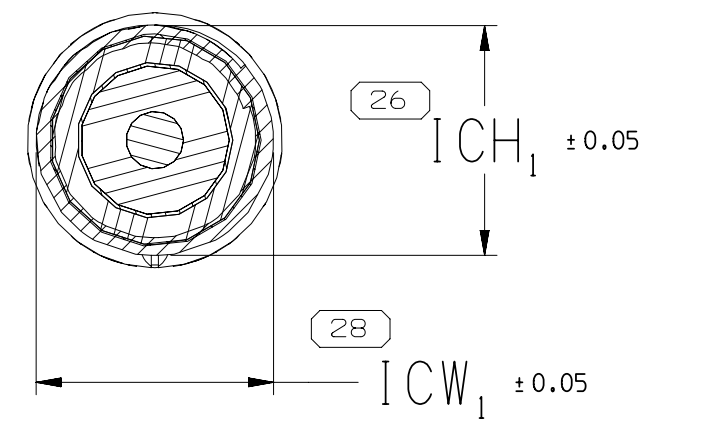
26
ICH_1 ±0.05
28
ICW_1 ±0.05

SECTION Y-Y

PART NO	REV	N/P	TYPE	CABLE TYPE	CABLE SPEC	CABLE DIA	A_1	D_1	E_1	F_1	G_1	H_1	OUTER TERMINAL SUB ASM	INNER TERMINAL	FERRULE	CCH_1	CCW_1	ICH_1	ICW_1	CCH_2 INNER TERM	CCW_2 INNER TERM
~~35700151~~	01	AB	102	RTK044	M8610101	3.55	3.05	4.1	10	3.1	1.4	3.75	35533080	35584335	35677343	3.65	3.65	3.65	3.65	0.95± 0.03	1.16± 0.05
~~35700150~~	01	AB	102	RTK031	M8043101	3.3	2.75	3	10.5	3	0.8	3.9	35533078	35584335	35677343	3.45	3.35	3.55	3.45	0.85± 0.03	1.15± 0.05
~~35700149~~	01	AB	102	RTK031	M6283101	3.3	2.75	4.1	9.8	3.1	0.8	3.75	35533078	35584335	35677343	3.4	3.35	3.45	3.35	0.85± 0.03	1.15± 0.05
~~35601267~~	01	AB	101	RG174	M7090101	2.8	2.22	3.8	8.6	2.6	0.6	3.85	35533076	35584334	35506381	2.55	2.85	2.85	3.05	0.6± 0.03	0.82± 0.05
~~35601266~~	01	AB	101	RG174 RW	M7971101	2.67	2.22	3.8	8.6	2.6	0.6	3.85	35533076	35584334	35506381	2.65	2.85	2.85	3.05	0.6± 0.03	0.82± 0.05

DRAWING NUMBER 35726366						
SIZE	SCALE	FRAME NO	SHEET NO	STG	REV	N/P
A1x3	10:1	2 OF 2	1 OF 1	R	03	-

NOTES

1. UNLESS OTHERWISE SPECIFIED AND/OR INDICATED:

   DIMENSIONS ARE TO FACE OF VIEW SHOWN AND AUTOMATICALLY ROUNDED BY COMPUTER FOR INSPECTION (SEE MATH MODEL FOR PRECISE DIMENSIONS). FOR ALL OTHER DIMENSIONS NOT SHOWN BUT REQUIRED FOR TOOL BUILD, SEE MATH MODEL FOR PRECISE TOOL PATH DATA.

2. * DENOTES DIMENSIONS MADE AT CUT-OFF & CRIMP DIE.
3. SUB-COMPONENTS, INCLUDING OUTER TERMINAL, CRIMP TUBE AND INSULATOR, CANNOT BE ALTERED BY THE ASSEMBLY PROCESS AND MUST MEET ALL DIMENSIONAL REQUIREMENTS FROM DRAWINGS. SEE CHART FOR PART NUMBERS.
4. FINAL ASSEMBLY INSTRUCTIONS PER PE494581.

⬭8⬭ PROCESS SENSITIVE DIMENSION

DIMENSIONS ENCLOSED IN ( ) INDICATE REFERENCE DIMENSIONS AND NO TOLERANCE LIMITS ARE ESTABLISHED

DIMENSIONAL RANGE (MM)		CHART D
FROM	0	>12
TO	12	
TOLERANCE UNLESS OTHERWISE SPECIFIED	±0.1	±0.2
ANGULAR TOLERANCE ±2°		

A ——— LINE DRAWN THROUGH A PART NUMBER INDICATES THAT PHYSICAL PARTS ARE NOT AVAILABLE FOR ORDERING.

PART NUMBERS THAT DO NOT HAVE A LINE PRESENT INDICATE THAT PHYSICAL PARTS ARE AVAILABLE FOR ORDERING.

CONTACT APTIV SALES TO ASSURE AVAILABILITY OF PARTS.

DWG TYPE
PART DRAWING

STYLE

VOLUME (CM³)

DISTR CODE
D

UNLESS OTHERWISE SPECIFIED

THIS DOCUMENT IS IN ACCORDANCE WITH ASME Y14.5M-1994 AS AMENDED BY THE GM GLOBAL DIMENSIONING AND TOLERANCING ADDENDUM-2001. SEPARATE PATTERNS OF FEATURES MAY BE GAGED SEPARATELY REGARDLESS OF DATUM REFERENCES.

ALL DIMENSIONS ARE IN MILLIMETERS

REFERENCE

THIRD ANGLE PROJECTION

DO NOT SCALE

USE MATH DATA

CAD NX

•APTIV•
CONNECTION SYSTEMS
WARREN, OH

COPYRIGHT 2022 APTIV. ALL RIGHTS RESERVED.

THIS DRAWING IS THE PROPERTY OF APTIV AND CONTAINS APTIV CONFIDENTIAL INFORMATION. THE REPRODUCTION, DISTRIBUTION AND UTILIZATION OF THIS DOCUMENT OR ITS RELATED CAD MATH DATA, AS WELL AS COMMUNICATION OF ANY CONTENT TO OTHERS, WITHOUT EXPRESS AUTHORIZATION, IS PROHIBITED.

		DATE
DR		
APVD1	E.SENA	31OC22
APVD2	E.SENA	31OC22
APVD3	R.KIRKPATRICK	01NO22
APVD4		
APVD5		

SUBSTANCES OF CONCERN AND RECYCLED CONT10949001 10949001

MATERIAL
SEE CHART

DRAWING NAME
TAXI ASM TERM M MCA-A 180 FASM SN

DRAWING NUMBER
35726366

SIZE	SCALE	FRAME NO	SHEET NO	STG	REV	N/P
A1x3	10:1	1 OF 2	1 OF 1	R	03	-

35726366

User: wz027c Part: 35726366-CUS01-S01/03 Date: 01-nov.-23 Time: 07:55:50