TAB HOUSING 28 WAY

CODING	VERSION	CODING	VERSION
CODING - B	1	CODING - B	2

SCALE 2:1

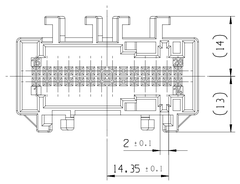

SCALE 2:1

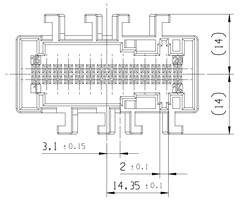

CODING - C	1

SCALE 2:1

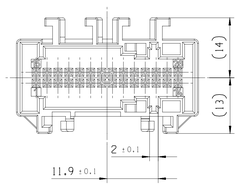

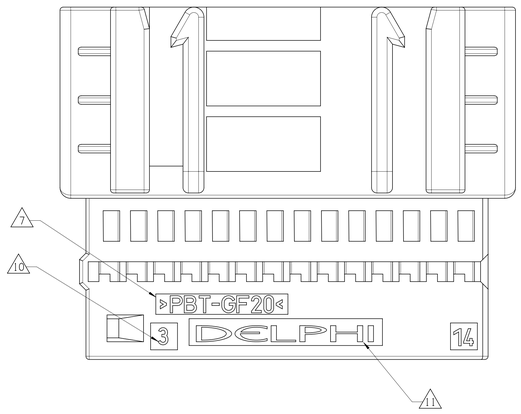

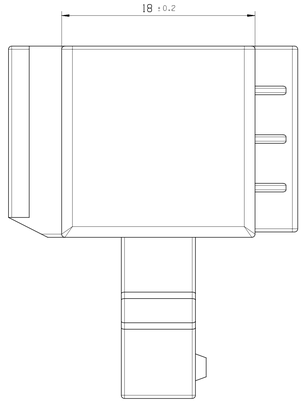

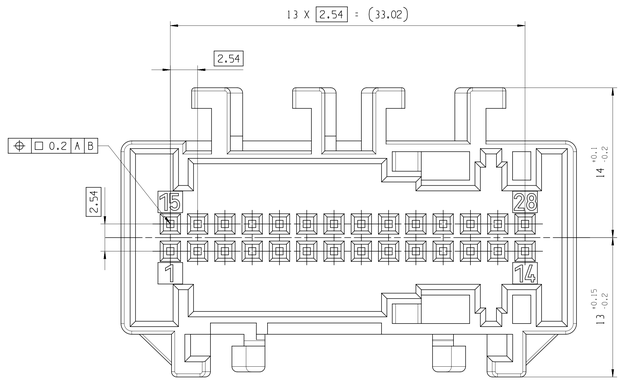

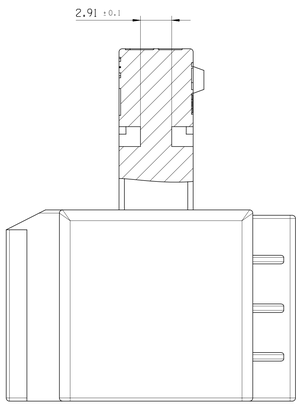

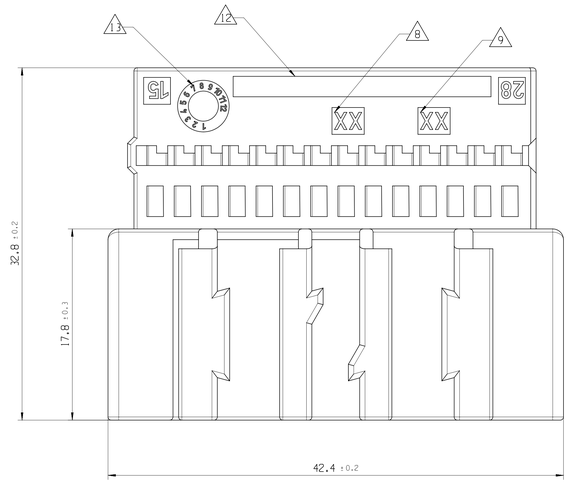

TAB HOUSING 28 WAY	B	2	15535047	0.0112	PBT-GF20	NATURAL
	C	1	15535041	0.0107	PBT-GF20	BLUE
	B	1	33165794	0.0107	PBT-GF20	NATURAL
	CODE	VERSION	APTIV PART NUMBER	WEIGHT(kg)	MATERIAL	COLOR

ASSOCIATED PARTS (FOR INFORMATION)

DESCRIPTION	APTIV P/N	WIRE SECTION	DIAMETER OF WIRE SIZE
COVER HOUSING	13915314	-	-
MQS 0.64 MALE TERMINAL	XXXXXXXX	XX - XXmm²	X.XXmm

NOTE	SPECIFICATIONS
1	MALE CONNECTOR ACCORDING TO APTIV SPECIFICATION: CAQE TBD
2	MALE CONNECTOR ACCORDING TO: -TEMPERATURE CLASS TX -ENGINE VIBRATOR CLASS VX -SEALING CLASS EX
3	USER'S MANUAL: TBD
4	DELIVERY CONNECTOR WEIGHT : SEE TABLE
5	NO WAFER HINGE OR WAFER HINGE BROKEN ALLOWED
6	VISUAL DEFECTS ON NO FUNCTIONNAL AREAS ALLOWED
1	MATERIAL CODE
2	TOOL CAVITY NUMBER
3	PART REVISION NUMBER
4	WAY NUMBERS
5	SUPPLIER LOGO
6	PART NUMBER
7	DATE CLOCK

A LINE DRAWN THROUGH A PART NUMBER INDICATES THAT PHYSICAL PARTS ARE NOT AVAILABLE FOR ORDERING.

PART NUMBERS THAT DO NOT HAVE A LINE PRESENT INDICATE THAT PHYSICAL PARTS ARE AVAILABLE FOR ORDERING.

CONTACT APTIV SALES TO ASSURE AVAILABILITY OF PARTS.

R 0.1 MAX
R 0.2 MAX
SHARP CORNER TOLERANCE

DIM TO CHECK
( ) DIM FOR HELP
THEORETIC DIM

DIMENSIONAL RANGE (MM) — CHART E1

FROM	> 0	> 20	> 30	> 70	>100	>150	>200	>250	>300
TO	20	30	70	100	150	200	250	300	400
TOLERANCE UNLESS OTHERWISE SPECIFIED	±0.15	±0.2	±0.3	±0.4	±0.5	±0.6	±0.8	±1	±1.2
ANGULAR TOLERANCE ±2°									

DO NOT SCALE

USE MATH DATA

CAD NX

3D VIEW

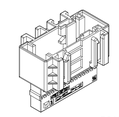

SCALE 1:1

DWG TYP: CUSTOMER PART DRAWING
WEIGHT (GR): SEE TABLE
VOLUME (CM³): ***
ROUTING
DISTR CODE: D

UNLESS OTHERWISE SPECIFIED

GENERAL TOLERANCES ACCORDING TO:
SEE CHART

GD&T ACCORDING TO:
ISO 1101

REFERENCE

FIRST ANGLE PROJECTION

MATERIAL:
SEE CHART

DRAWING NAME:
TAB HOUSING 28 WAY
FOR MQS 0.63

DRAWING NUMBER
1 3915321

SIZE	SCALE	FRAME NO	SHEET NO	STG	REV	N/P
A0	5:1	1 OF 1	1 OF 1	R	01	

•APTIV•
CONNECTION SYSTEMS
Chennai, India
COPYRIGHT 2011 APTIV, ALL RIGHTS RESERVED.
THIS DRAWING IS THE PROPERTY OF APTIV AND CONTAINS APTIV CONFIDENTIAL INFORMATION. THE REPRODUCTION, DISTRIBUTION AND UTILIZATION OF THIS DOCUMENT OR ITS RELATED CAD MATH DATA, AS WELL AS COMMUNICATION OF ANY CONTENT TO OTHERS, WITHOUT EXPRESS AUTHORIZATION, IS PROHIBITED.

		DATE
DR	P.BALAJI	16NO21
APVD1	LAGUETTE MAURICE	16NO21
APVD2	LAGUETTE MAURICE	16NO21
APVD3		
APVD4		
APVD5		

SUBSTANCES OF CONCERN AND RECYCLED CONTENT PER APTIV 1094901

DWG STATUS						ZONE	REVISION HISTORY	AUTH	DR	APVD 1	APVD 2
DATE	STG	REV	N/P	CHG							
16NO21	R	01					INITIAL RELEASE		P.BAL	W.LAG	W.LAG

User: K250TM
PC: SIPL-1213282
Date: 24-Feb-22 Time: 15:38:43