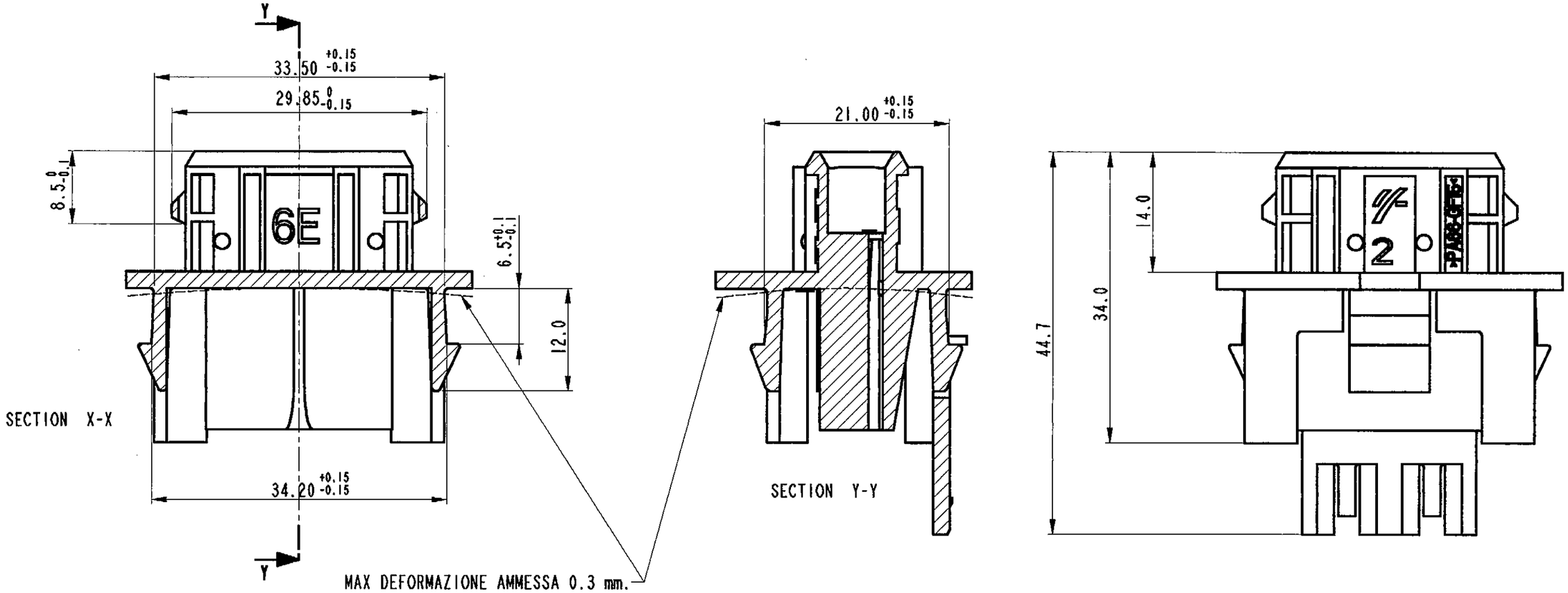

SCALE 1.0

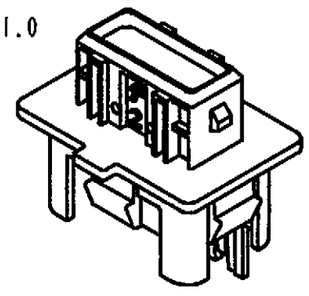

SCALE 1.0

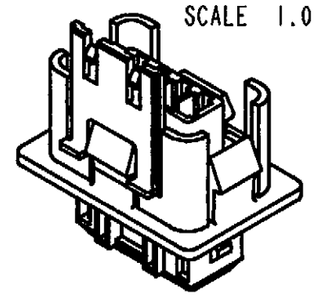

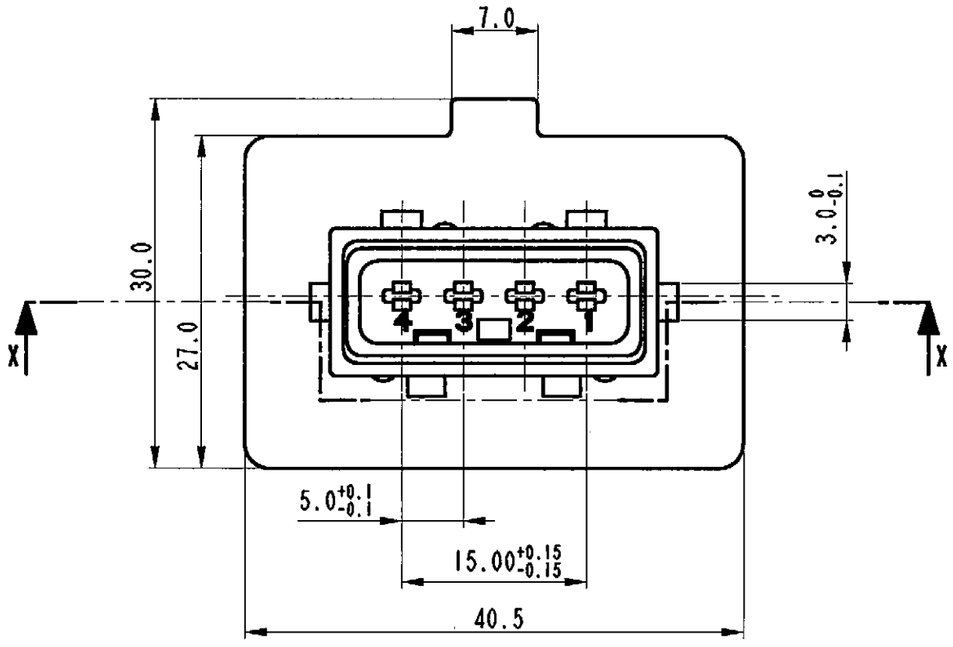

CAVITA' ADATTA PER IL CONTATTO
SICMA 2 MASCHIO 2.8 X 0.8
N° CATALOGO 211CL3S2120 (rango filo 1.0 ≡ 2.5 mm²)

Description : CONNETTORE 4 VIE PER FARO (HEAD LAMP HOUSING)		Cat. No : HLHMHPN04BK	
Draft Len	This is our exclusive property. It is not to be copied, reprinted or disclosed to a third party, nor used for manufacturing, without our written consent, and has to be returned to us in case of no usage.	European projection	FCI FRAMATOME CONNECTORS INTERNATIONAL
Date 14/04/97		Not to scale	Framatome connectors Italia S.p.A.
We reserve the right to change dimensions or requirements without prior notice.		All dimensions in mm Tolerances ± 0.3 mm Unless otherwise specified	FSC308168 customer drawing — Rev. 03

SHEET 1 of 1

FSC308168