NOTE	SPECIFICATIONS
1	USER'S MANUAL MVL'S REFERENCE: PU172 - ASSOCIATED PRODUCTS (TERMINAL,PLUG,...) ARE DEFINED IN THE USER'S MANUAL (2)
2	WIRE INSULATION DIAMETER :MINI=1.25 :MAXI=2.50
3	DELIVERED CONNECTOR WEIGHT : 11 g
4	FEMALE/MALE CONNECTOR MATING FORCE F 75 N
5	COMPATIBLE WITH CONNECTOR DRAWING PCC0802481

DWG STATUS DATE	STG	REV	N/P	CHG	ZONE	REVISION HISTORY	AUTH	DR	APVD 1	APVD 2
29JL14	R	01	-	-		DRAWING NUMBER PCC0816784 BECAME 33517519-CU501		DGL	DGL	DGL
31JL14	R	02	-	-	- - 06 C10	KEYS OF POLARIZATION OF REAR GRID ARE SUPPRESSED NOTE ADDED FOR REAR GRID DELPHI REFERENCE ADDED IN THE TABLE		SELVA	SANUP	LDIAZ
19FE16	R	02	AA	-	H11	NOTE 1 IN THE TABLE UPDATED		NSUR	SANUP	GJAI

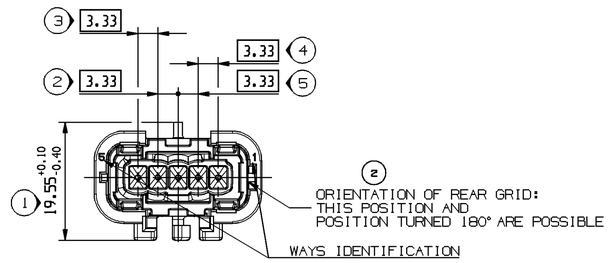

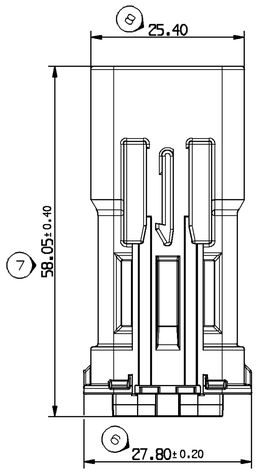

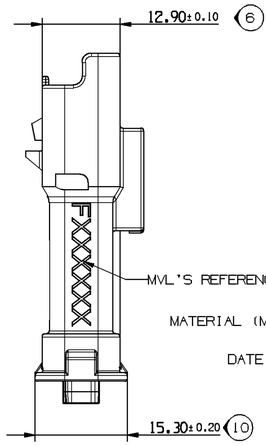

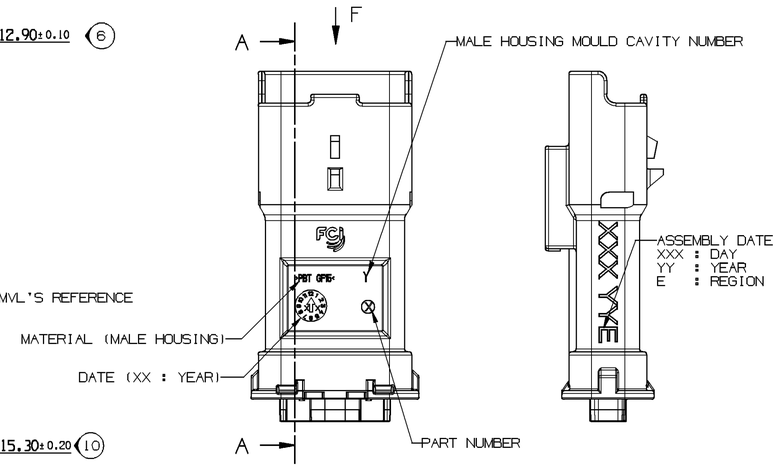

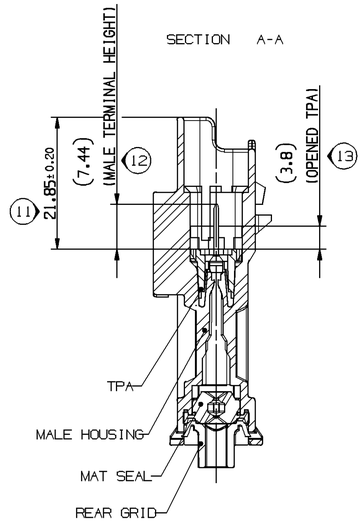

MALE HOUSING	S273700	33521982	PBT GF15	BLACK
	S373700	33521983		BLUE
	S473700	33521984		GREY
	S573700	33521985		RED
	S673700	33521986		PURPLE
TPA	S414700	33521987	PBT GF15	YELLOW
MAT SEAL	C493700	33503346	SILICONE	GREY
REAR GRID	S483700	33512022	PBT GF15	BLACK
DESCRIPTION	MVL SERIAL REF.	DELPHI SERIAL REF. (2)	MATERIAL	COLOUR

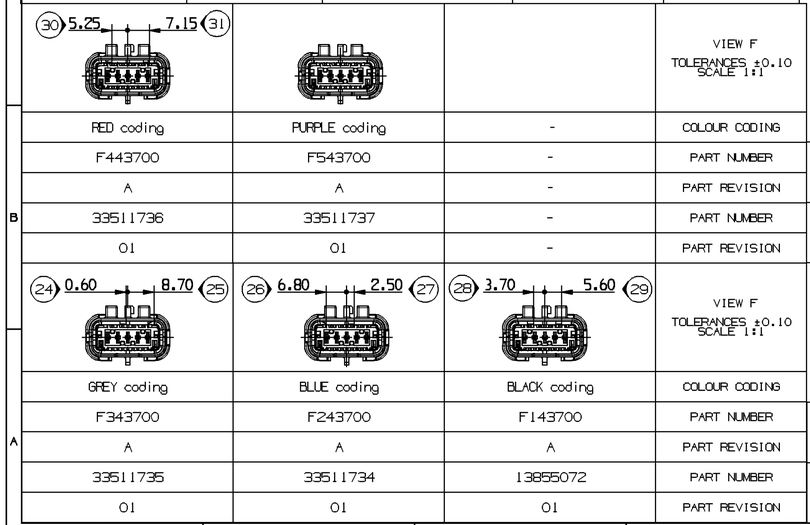

			VIEW F TOLERANCES ±0.10 SCALE 1:1	
RED coding	PURPLE coding	-	COLOUR CODING	
F443700	F543700	-	PART NUMBER	MVL
A	A	-	PART REVISION	
33511736	33511737	-	PART NUMBER	DELPHI
01	01	-	PART REVISION	
			VIEW F TOLERANCES ±0.10 SCALE 1:1	
GREY coding	BLUE coding	BLACK coding	COLOUR CODING	
F343700	F243700	F143700	PART NUMBER	MVL
A	A	A	PART REVISION	
33511735	33511734	13855072	PART NUMBER	DELPHI
01	01	01	PART REVISION	

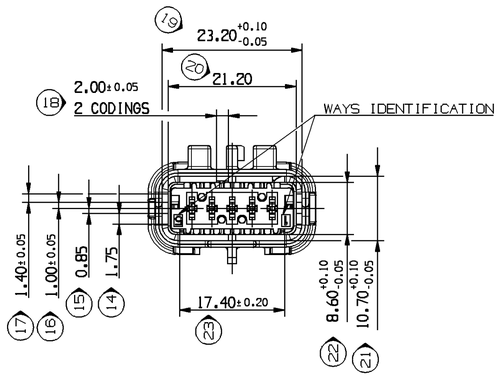

OVERALL DIMENSION MATTED ON FEMALE CONNECTOR
SEE NOTE 5

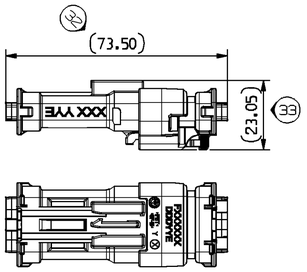

3D VIEW

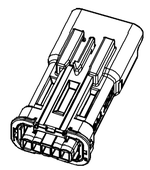

SCALE 1:1
BLACK CODING DRAWN

A LINE DRAWN THROUGH A PART NUMBER INDICATES THAT PHYSICAL PARTS ARE NOT AVAILABLE FOR ORDERING.

PART NUMBERS THAT DO NOT HAVE A LINE PRESENT INDICATE THAT PHYSICAL PARTS ARE AVAILABLE FOR ORDERING.

CONTACT DELPHI SALES TO ASSURE AVAILABILITY OF PARTS.

LA LIGNE TRACÉE SUR LA RÉFÉRENCE PIÈCE INDIQUE QUE LA PIÈCE N'EST PAS DISPONIBLE À LA COMMANDE.

LES RÉFÉRENCES PIÈCES QUI NE SONT PAS BARRÉES INDIQUENT QUE CELLES-CI SONT DISPONIBLES PHYSIQUEMENT POUR ÊTRE COMMANDÉES.

CONTACTER LE SERVICE COMMERCIAL DE DELPHI POUR S'ASSURER DE LA DISPONIBILITÉ DES PIÈCES

R 0.1 MAX
R 0.2 MAX
SHARP CORNER TOLERANCE

DIN TO CHECK
COTES A VERIFIER
( ) DIN FOR HELP
COTES POUR INFO
THEORETIC DIN
COTES THEORIQUES

DWG TYP
PART DRAWING

WEIGHT (GR)	DISTR CODE
VOLUME (CM³)	D
ROUTING	

UNLESS OTHERWISE SPECIFIED

GENERAL TOLERANCES
ACCORDING TO:
±0.1
±2°

GD&T
ACCORDING TO:

REFERENCE
MVL DWG - PCC0816784

FIRST ANGLE PROJECTION

DO NOT SCALE
USE MATH DATA

DELPHI

DELPHI PACKARD ELECTRICAL/ELECTRONIC ARCHITECTURE
WARREN, OH

COPYRIGHT 2013 DELPHI CORPORATION AND/OR ITS AFFILIATES.
ALL RIGHTS RESERVED.
REVISED 2014
THIS DRAWING IS THE PROPERTY OF DELPHI CORPORATION AND CONTAINS DELPHI CONFIDENTIAL INFORMATION. THE REPRODUCTION, DISTRIBUTION AND UTILIZATION OF THIS DOCUMENT OR ITS RELATED CAD MATH DATA, AS WELL AS COMMUNICATION OF ANY CONTENT TO OTHERS, WITHOUT EXPRESS AUTHORIZATION, IS PROHIBITED.

CE PLAN EST LE PROPRIETE DE DELPHI CORPORATION ET CONTIENT DES INFORMATIONS DELPHI CONFIDENTIELLES. LA REPRODUCTION, LA DISTRIBUTION ET L'UTILISATION DE CE DOCUMENT OU DE SES DONNEES MATHEMATIQUES CAD, AINSI QUE LA COMMUNICATION DE TOUT CONTENU À AUTRUI, SANS AUTORISATION EXPRESSE EST INTERDITE.

		DATE
DR	SELVA	31JL14
APVD1	SANUP	31JL14
APVD2	LYDIE DIAZ	31JL14
APVD3	PASCAL MENARD	31JL14
APVD4		
APVD5		

SUBSTANCES OF CONCERN AND RECYCLED CONTENT PER DELPHI 10949001
MATIERES PROSCRITES ET CONTENU RECYCLABLE SELON DELPHI 10949001

MATERIAL
SEE CHART

DRAWING NAME
5-WAY MALE SEALED CONNECTOR
SENSOMATE SICMA 1.5

DRAWING NUMBER
33517519

SIZE	SCALE	FRAME NO	SHEET NO	STG	REV	N/P
A1	2:1	1 OF 1	1 OF 1	R	02	AA

Date: 19-Feb-16 Time: 12:32
Part: 33517519-CU501-S01
Metasuppl: