CODING
SCALE 2:1

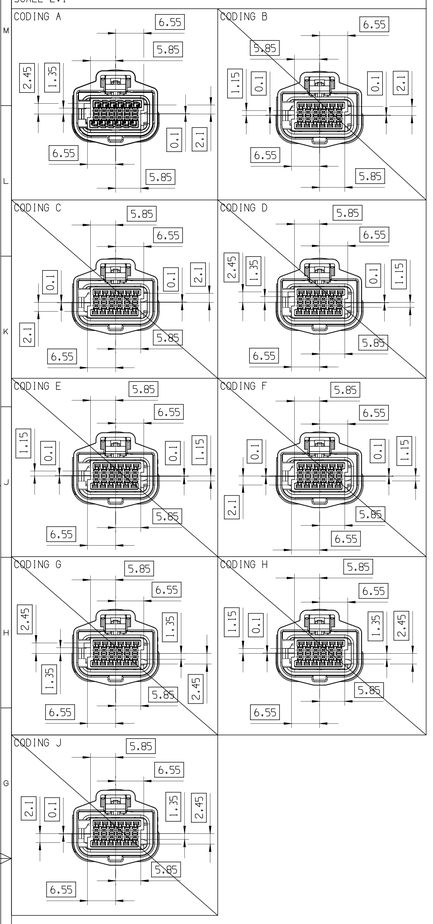

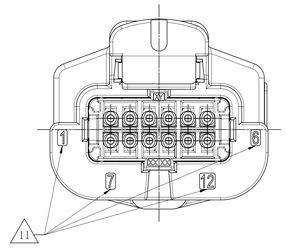

VERSION 1 (0°): 24

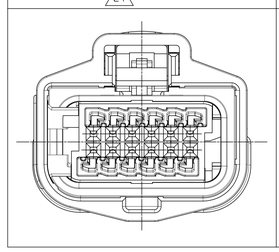

VERSION 2 (180°): 25

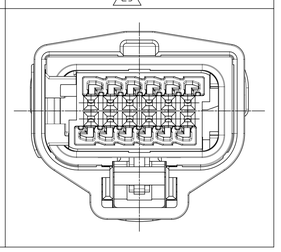

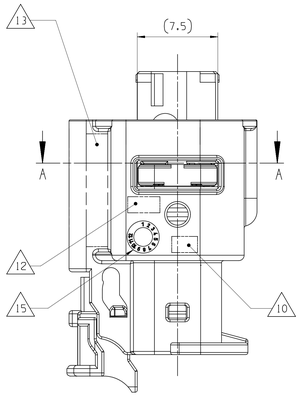

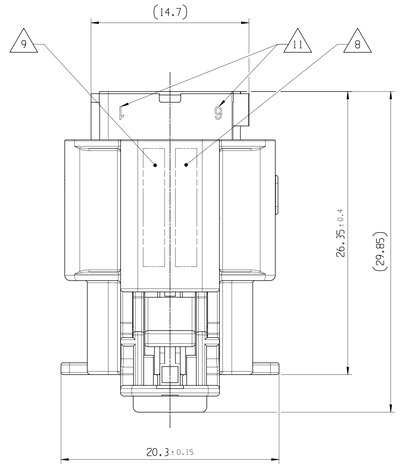

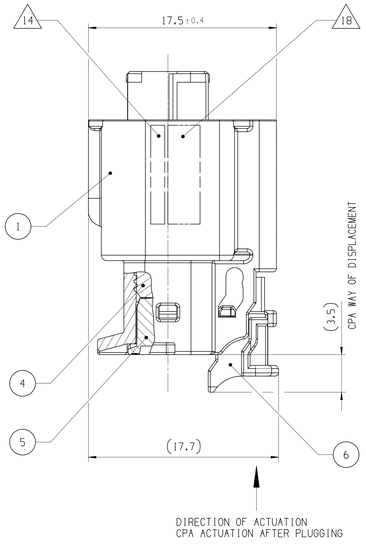

NOTES	
1	DELIVERY CONDITON WITH TPA AND CPA AT PRE-POSITION
2	APPLICABLE FOR ALL CODINGS
3	APPLICABLE FOR ALL POLECOUNT VERSIONS
4	GENERAL PART SURFACE, IF NOT OTHERWISE SPECIFIED: Ra<2.3µm (VDI3400-27); MOLD FLASH AND INJECTION GATE <0.1; MOLD OFFSET OR EJECTOR MARKS <0.1
5	TOLERANCING ISO 8015 (AD)-DIN EN ISO 291:2008-08
6	GENERAL TOLERANCE: ⌓ 0.4 CZ
7	ACCEPTANCE CONDITIONS ACC. ISO 20457
8	APN APTIV PART NO.
9	CUSTOMER PART NO., OPTIONAL
10	ASSEMBLY PART REV.
11	TERMINAL CAVITY MARK
12	MOULD CAVITY MARK
13	APTIV COMPANY LOGOTYPE
14	MATERIAL IDENTIFICATION
15	DATE CLOCK
16	MIN. POSSIBLE FEED-THROUGH APERTURE
17	OPERATION SPACE
18	COUNTRY OF ORIGIN
19	PRODUCT SPECIFICATION "T.B.D"
20	APPLICATION SPECIFICATION "T.B.D"
21	MATCH TO INTERFACE S1035201 VERSION 1 & 2
22	SUITABLE TERMINAL SYSTEM: SEE TABLE
23	NOT USED TERMINAL CAVITIES MUST BE CLOSED BY SEAL PLUG: 33239444
24	VERSION 1 (0°); 12-WAY FEMALE CONNECTOR SHOWN
25	VERSION 2 (180°); 12-WAY FEMALE CONNECTOR

DWG STATUS DATE	STG	REV	N/P	CHG	ZONE	REVISION HISTORY	AUTH	DR	APVD 1	APVD 2
11FE21	R	01	-			INITIAL RELEASE		V.HAR	V.SAT	A.URB

REAR COVER 90° LEFT (OPTIONAL)
SCALE 2:1

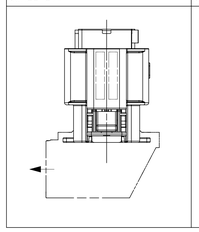

REAR COVER 90° RIGHT (OPTIONAL)
SCALE 2:1

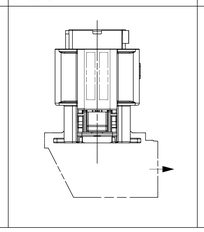

REAR COVER 0° (OPTIONAL)
SCALE 2:1

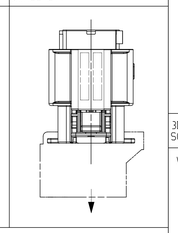

3D-VIEW
SCALE 2:1

VERSION 1: FEMALE CONNECTOR 0°

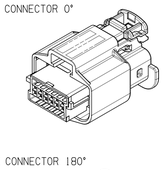

VERSION 2: FEMALE CONNECTOR 180°

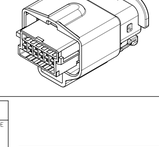

CLASSIFICATION ACC.	LV 214	USCAR-2 Rev.7
SEALING CLASSIFICATION	IPX9K*	S2*
VIBRATION CLASSIFICATION SEVERITY	SEVERITY 4	V1
TEMPERATURE RANGE	-40...+125° C	T2
THE PRODUCT SPECFICATION IS BINDING		

*ONLY WITH PROTECTION COVER

CPA
SCALE 2:1

CPA IN END POSITION

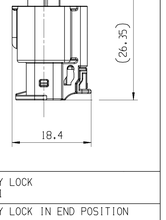

SECONDARY LOCK
SCALE 2:1

SECONDARY LOCK IN END POSITION

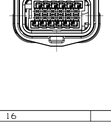

CONNECTION CLEARANCE (12 WAY)
SCALE 2:1

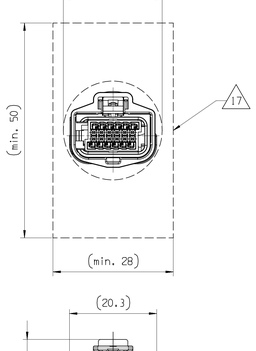

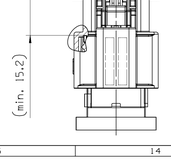

LOCAL SECTION A-A
TURNED THROUGH 90°

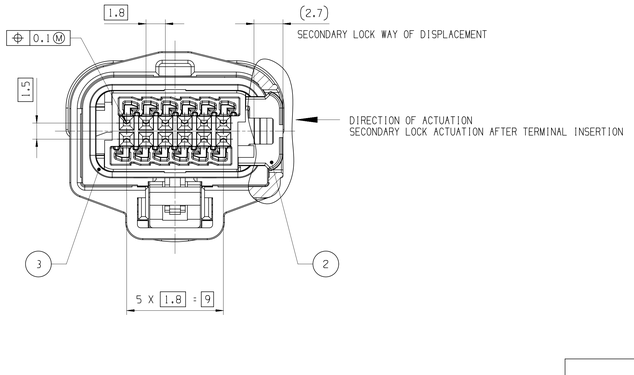

ITEM	DESIGNATION			MATERIAL	COLOUR	SIMILAR RAL
6	CPA			>PBT-GF20<	RED	3001
5	REAR GRID	12-12-0		>PBT-GF15 HR<	NATURAL	-
		12-9-1				
		12-7-1				
		12-6-1				
4	MAT SEAL			>VMQ<; 20 SHORE A	REDDISH BROWN	3013
3	HOUSING SEAL			>VMQ<; 50 SHORE A	REDDISH BROWN	3011
2	SECONDARY LOCK			>PBT-GF30<	VIOLET	4006
1	ASM HOUSING	OUTER HOUSING	OUTER HOUSING 0°	>PBT-GF15 HR<	BLACK	9011
			OUTER HOUSING 180°			
		CAVITY MODULE		>PA6-GF30<	SEE TABLE	

12-6-1	180°	Cavity No.	01	02	03	04	05	06
				X	X	X		
				X	X	X		
			07	08	09	10	11	12
12-7-1	180°	Cavity No.	01	02	03	04	05	06
				X		X		
				X	X	X		
			07	08	09	10	11	12
12-9-1	0°	Cavity No.	01	02	03	04	05	06
						X		
					X	X		
			07	08	09	10	11	12
12-12-0	0° & 180°	Cavity No.	01	02	03	04	05	06
			07	08	09	10	11	12
Total-Open-Counter	Suitable Connector							
Variant Rear Grid		X - Closed Cavity						
Rear Grid Versions								

SUITABLE FEMALE CONTACT	DRAWING-NO.	MAX. WIRE CROSS SECTION
APTIV CTS 050 CB	33381898	0.35mm² FLRY
TE MCON 050 CB	33277910	0.35mm² FLRY

DESIGNATION:	CODING	APTIV PART NO. SERIAL	WEIGHT CONNECTOR (g)	COMPOSITION FEMALE CONNECTOR: ASM. HOUSING: CAVITY MODULE: COLOUR OF CAVITY MODULE	SIMILAR TO RAL	CODING A	B	C	D	E	F	G	H	J	OUTER HOUSING 0°	OUTER HOUSING 180°	SECONDARY LOCK	HOUSING SEAL	MAT SEAL	REAR GRID 12-12-0	12-9-1	12-7-1	12-6-1	CPA
FEMALE CONNECTOR ; (WITH CPA)	A	35511141	4.38	BLACK	9011	X									X		X	X	X	X				X
		35527159														X								
		--				X									X						X			
		35526984														X						X		
		35526986														X							X	
	B	--		WHITE	9010		X																	
	C	--		BLUE	5012			X																
	D	--		VIOLET	4004				X															
	E	--		GREEN	6017					X														
	F	--		BROWN	8011						X													
	G	--		GREY	7036							X												
	H	--		LIGHT PINK	3015								X											
	J	--		BEIGE	1001									X										

DWG TYP
CUSTOMER PART DRAWING
WEIGHT (GR) (NET)
SEE TABLE
VOLUME (CM³)
-
ROUTING
DISTR CODE
D

UNLESS OTHERWISE SPECIFIED
GENERAL TOLERANCES ACCORDING TO: SEE TABLE
GD&T ACCORDING TO: ISO 1101

REFERENCE

FIRST ANGLE PROJECTION

DO NOT SCALE
USE MATH DATA

APTIV
CONNECTION SYSTEMS
Chennai, India

COPYRIGHT 2021 APTIV. ALL RIGHTS RESERVED.
THIS DRAWING IS THE PROPERTY OF APTIV AND CONTAINS APTIV CONFIDENTIAL INFORMATION. THE REPRODUCTION, DISTRIBUTION AND UTILIZATION OF THIS DOCUMENT OR ITS RELATED CAD MATH DATA, AS WELL AS COMMUNICATION OF ANY CONTENT TO OTHERS, WITHOUT EXPRESS AUTHORIZATION, IS PROHIBITED.

		DATE
DR	V.HARI	11FE21
APVD1	V.SATHISH	11FE21
APVD2	A.URBANIAK	11FE21
APVD3		
APVD4		
APVD5		

SUBSTANCES OF CONCERN AND RECYCLED CONTENT PER APTIV 1094001

MATERIAL
SEE TABLE

DRAWING NAME
12WAY FEMALE CONNECTOR
0.5MM TERMINAL - WATERPROOF

DRAWING NUMBER
35488247

SIZE	SCALE	FRAME NO	SHEET NO	STG	REV	N/P
A0	5:1	1 OF 1	1 OF 1	R	01	-

User: U843
Path: 35488247_CUSTOMER_PART_DRAWING.prt
Part: 35488247
Date: 01-Aug-21 Time: 13:48:52