SYMBOL DEFINITION		
A DIMENSION WITHOUT AN INSPECTION REPORT SYMBOL (4) DOES NOT REQUIRE INSPECTION. IT MAY BE CONTROLLED ON THE INDIVIDUAL COMPONENT DRAWING.	TOTAL NO OF INSPECTIONS REQUIRED	8
	LAST NO. USED	8

MISSING SYMBOLS
NO MISSING SYMBOL NUMBER

DWG STATUS					ZONE	REVISION HISTORY	AUTH	DR	APVD 1	APVD 2
DATE	STG	REV	N/P	CHG						
10DE19	R	01	-	-		CREATED PART DRAWING.	445552	ZML	HZ	SBH
13AP21	R	01	AA	-		DIM #3 WAS 17.5.	446609	ZML	HZ	SBH

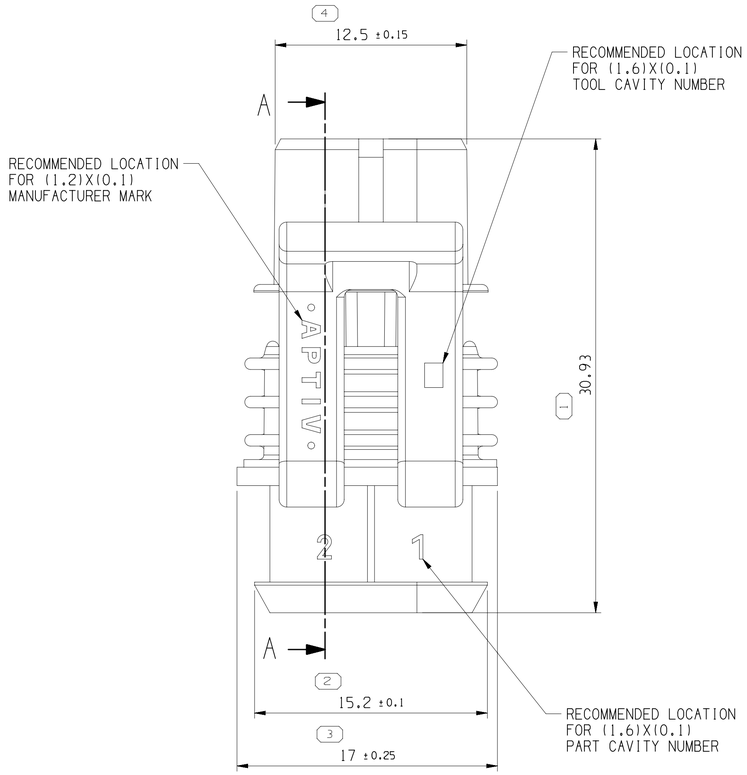

PLR IN PRE-LOCK POSITION

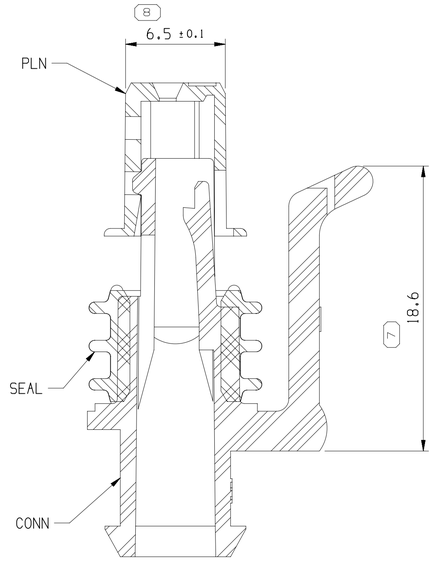

SECTION A - A

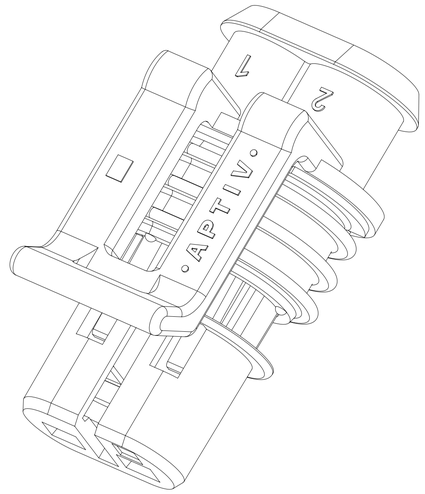

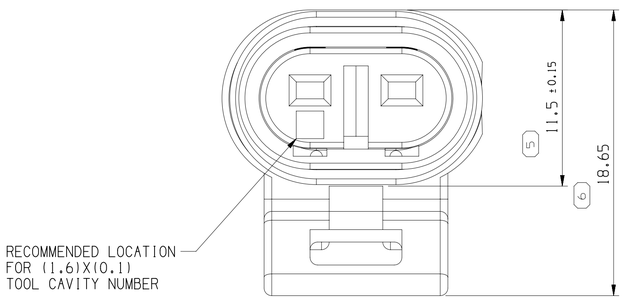

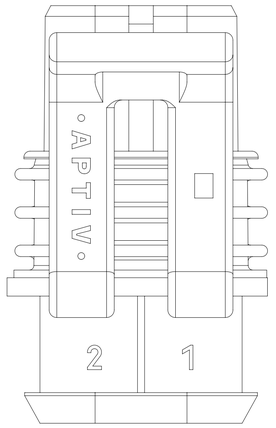

PLR IN FINAL LOCK POSITION

NOTES

1. UNLESS OTHERWISE SPECIFIED AND/OR INDICATED:

   DIMENSIONS ARE TO FACE OF VIEW SHOWN AND AUTOMATICALLY ROUNDED BY COMPUTER FOR INSPECTION (SEE MATH MODEL FOR PRECISE DIMENSIONS). FOR ALL OTHER DIMENSIONS NOT SHOWN BUT REQUIRED FOR TOOL BUILD, SEE MATH MODEL FOR PRECISE TOOL PATH DATA.

2. WIRE DRESS COVER 0.35MM2-2.5MM2.
3. FOR APPLICATION DATA SEE THE APPLICATION DRAWING.
4. MAXIMUM DRAFT ANGLE 0° 30'.

APPLICATION TERMINALS P/N	PLATING	CABLE CORE(MM2)	CABLE SEAL P/N
15305560	FSN3	1.50-2.50	15324973
15363930	FSN5	1.50-2.50	15324973
15344807	FSN3	1.50-2.00	15324973
15305561	FSN3	1.00-1.50	15324976
10737717	FSN5	1.00-1.50	15324976
15305562	FSN3	0.50-1.00	15324974 OR 15366063
12176884	FSN3/AU	0.50-1.00	15324974 OR 15366063
15363931	FSN5	0.50-1.00	15324974 OR 15366063
15344808	FSN3	0.50-1.00	15324974 OR 15366063
15454820	ESN/AU/PD-AG	0.35-0.50	15324974 OR 15366063

ASM PN	REV	PART PN	REV	PART NAME	MATERIAL AND COLOR	QTY
35391472	01	35391476	01	PLR	PLAS PA66 GF15 GRA LT.	1
		35391475	01	CONNECTOR	PLAS PA66 GF15 BLK	1
		12103067	02	SEAL CONN	ELAS VMQ GRA	1

A ⁄ LINE DRAWN THROUGH A PART NUMBER INDICATES THAT PHYSICAL PARTS ARE NOT AVAILABLE FOR ORDERING.

PART NUMBERS THAT DO NOT HAVE A LINE PRESENT INDICATE THAT PHYSICAL PARTS ARE AVAILABLE FOR ORDERING.

CONTACT APTIV SALES TO ASSURE AVAILABILITY OF PARTS.

DWG TYPE: PART DRAWING

STYLE:

VOLUME (CM³): 2.217

DISTR CODE:

UNLESS OTHERWISE SPECIFIED
THIS DOCUMENT IS IN ACCORDANCE WITH ASME Y14.5-2009, SEE APTIV ENGINEERING DESIGN STANDARD B6 2017 FOR ISO 1101:2004 RECONCILIATION REQUIREMENTS.

ALL DIMENSIONS ARE IN MILLIMETERS

REFERENCE:

(1) PROCESS SENSITIVE DIMENSION

DIMENSIONS ENCLOSED IN ( ) INDICATE REFERENCE DIMENSIONS AND NO TOLERANCE LIMITS ARE ESTABLISHED

DIMENSIONAL RANGE (MM)									CHART M
FROM	> 0	> 6	> 30	> 70	>120	>160	>200	>250	>315
TO	6	30	70	120	160	200	250	315	400
TOLERANCE UNLESS OTHERWISE SPECIFIED									
	±0.1	±0.2	±0.3	±0.4	±0.45	±0.55	±0.7	±0.85	±1.05

ANGULAR TOLERANCE ±1°

THIRD ANGLE PROJECTION

DO NOT SCALE
USE MATH DATA
CAD NX

·APTIV·
CONNECTION SYSTEMS
Anting, China

COPYRIGHT 2019 APTIV. ALL RIGHTS RESERVED.

THIS DRAWING IS THE PROPERTY OF APTIV AND CONTAINS APTIV CONFIDENTIAL INFORMATION. THE REPRODUCTION, DISTRIBUTION AND UTILIZATION OF THIS DOCUMENT OR ITS RELATED CAD MATH DATA, AS WELL AS COMMUNICATION OF ANY CONTENT TO OTHERS, WITHOUT EXPRESS AUTHORIZATION, IS PROHIBITED.

	DATE
DR	
APVD1 LIU ZHIMIAO	10DE19
APVD2 ZHOU HUI	10DE19
APVD3 HUANG SUIBIN	10DE19
APVD4	
APVD5	

SUBSTANCES OF CONCERN AND RECYCLED CONT10949001 10949001

MATERIAL: SEE CHART

DRAWING NAME: ASM CONN 2 F GT 150 SLD

DRAWING NUMBER: 35391472

SIZE	SCALE	FRAME NO	SHEET NO	STG	REV	N/P
A1	5:1	1 OF 1	1 OF 1	R	01	AA