WIRE OUTLET RIGHT (AT CAVITY 104)

APTIV P/N	CODING
~~33513095~~	CODE HR

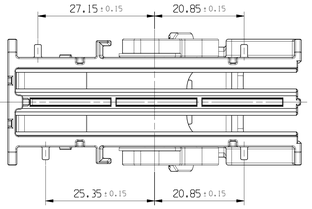

~~33513096~~	CODE GR

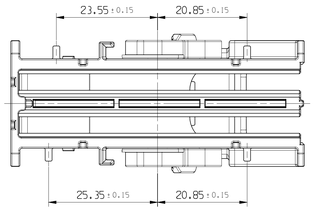

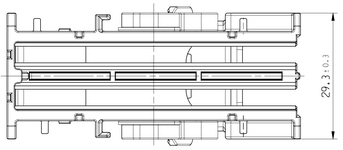

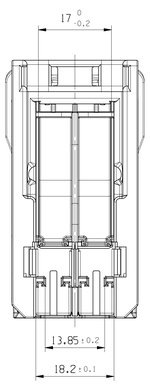

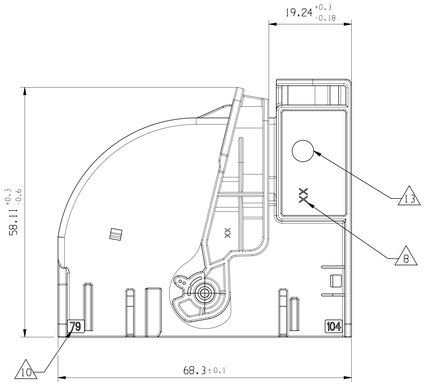

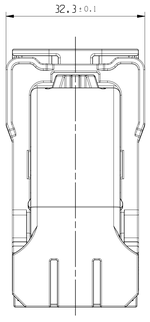

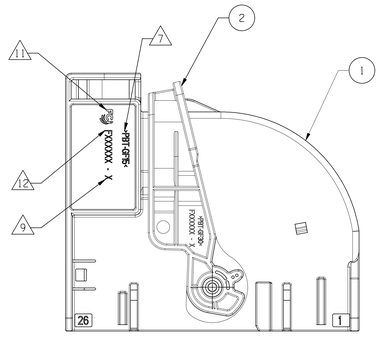

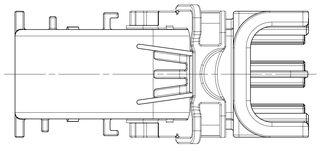

OVERALL DIMENSION FOR MOUNTABILITY

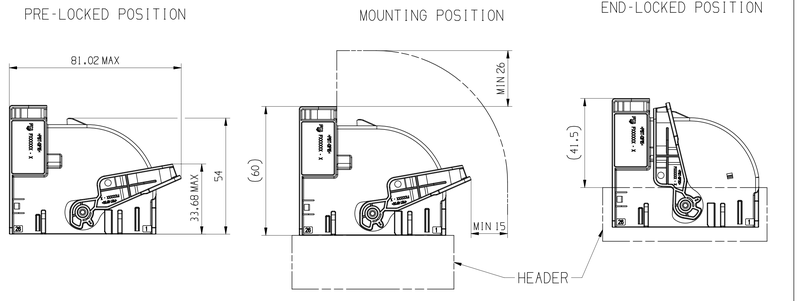

ASSOCIATED PARTS (FOR INFORMATION)		
DESCRIPTION	MVL P/N	APTIV P/N
52W FEMALE MODULE LEFT	F427100	13762437
52W FEMALE MODULE RIGHT	F527100	13762438

WIRE OUTLET RIGHT (AT CAVITY 104)	CODE GR	F666600	~~33511096~~	104W FEMALE MODULE HOLDER COD GR	F466600	33523099	0.030	PBT-GF15	YELLOW	1
				LEVER CODE G	F065600	33523107		PBT-GF30	YELLOW	2
	CODE HR	F766600	~~33513095~~	104W FEMALE MODULE HOLDER COD HR	F566600	33523100	0.030	PBT-GF15	YELLOW	1
				LEVER CODE H	F165600	3352308		PBT-GF30	PINK	2
	CODING	MVL P/N	APTIV P/N	DESCRIPTION	MVL P/N	APTIV PART NUMBER	WEIGHT (Kg)	MATERIAL	COLOR	NO.

NOTE	SPECIFICATIONS
1	FEMALE CONNECTOR ACCORDING TO APTIV SPECIFICATION: CAGE TBD
2	FEMALE CONNECTOR ACCORDING TO: -TEMPERATURE CLASS T3 -ENGINE VIBRATOR CLASS V1 -SEALING CLASS - UNSEALED CONNECTOR
3	USER'S MANUAL: 33523055-CUS72-S01
4	DELIVERY CONNECTOR WEIGHT : SEE TABLE
5	NO WAFER HINGE OR WAFER HINGE BROKEN ALLOWED
6	VISUAL DEFECTS ON NO FUNCTIONNAL AREAS ALLOWED
7	MATERIAL MARKING
8	MOLD CAVITY NUMBER
9	PART REVISION NUMBER
10	WAY NUMBER
11	SUPPLIER LOGO
12	PART NUMBER
13	DATE INSERT

A ——— LINE DRAWN THROUGH A PART NUMBER INDICATES THAT PHYSICAL PARTS ARE NOT AVAILABLE FOR ORDERING.

PART NUMBERS THAT DO NOT HAVE A LINE PRESENT INDICATE THAT PHYSICAL PARTS ARE AVAILABLE FOR ORDERING.

CONTACT APTIV SALES TO ASSURE AVAILABILITY OF PARTS.

R 0.1 MAX
R 0.2 MAX
SHARP CORNER TOLERANCE

DIM TO CHECK
DIM FOR HELP
THEORETIC DIM

DIMENSIONAL RANGE (MM)									
FROM	> 0	> 20	> 30	> 70	> 100	> 150	> 200	> 250	> 300
TO	20	30	70	100	150	200	250	300	400
CHART ILT									
TOLERANCE UNLESS OTHERWISE SPECIFIED									
	±0.15	±0.2	±0.3	±0.4	±0.5	±0.6	±0.8	±1	±1.2

ANGULAR TOLERANCE ±2°

DWG STATUS						ZONE	REVISION HISTORY	AUTH	DR	APVD 1	APVD 2
DATE	STG	REV	N/P	CHG							
16DE21	R	01					INITIAL RELEASE		P.BAL	W.LAG	W.LAG

3D VIEW

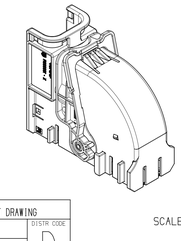

SCALE 1:1

DWG TYP: CUSTOMER PART DRAWING
WEIGHT (GR): SEE TABLE
VOLUME (CM³): ---
ROUTING:
DISTR CODE: D

UNLESS OTHERWISE SPECIFIED

GENERAL TOLERANCES ACCORDING TO:
SEE CHART

GD&T ACCORDING TO:
ISO1101

REFERENCE: pcc0778648

FIRST ANGLE PROJECTION

DO NOT SCALE

USE MATH DATA

CAD NX

APTIV
CONNECTION SYSTEMS
Chennai, India

COPYRIGHT 2021 APTIV. ALL RIGHTS RESERVED.
THIS DRAWING IS THE PROPERTY OF APTIV AND CONTAINS APTIV CONFIDENTIAL INFORMATION. THE REPRODUCTION, DISTRIBUTION AND UTILIZATION OF THIS DOCUMENT OR ITS RELATED CAD MATH DATA, AS WELL AS COMMUNICATION OF ANY CONTENT TO OTHERS, WITHOUT EXPRESS AUTHORIZATION, IS PROHIBITED.

		DATE
DR	P.BALAJI	16DE21
APVD1	LAGUETTE MAURICE	16DE21
APVD2	LAGUETTE MAURICE	16DE21
APVD3		
APVD4		
APVD5		

SUBSTANCES OF CONCERN AND RECYCLED CONTENT PER APTIV 0949001

MATERIAL: SEE TABLE

DRAWING NAME: 104-WAY MODULE HOLDER CPL

DRAWING NUMBER: 33523055

SIZE	SCALE	FRAME NO	SHEET NO	STG	REV	N/P
A0	2:1	1 OF 1	1 OF 2	R	01	

User: PZSOTM
PZSOTM_VDS2022_CUS72V01_Starter_22-Feb-22
T Heat: 121.21.48

DWG STATUS						ZONE	REVISION HISTORY	AUTH	DR	APVD 1	APVD 2
DATE	STG	REV	N/P	CHG							
16DE21	R	01					INITIAL RELEASE		P.BAL	W.LAG	W.LAG

WIRE OUTLET 25° LEFT DOWN (AT CAVITY 79)

APTIV P/N	CODING
33514399	CODE AL79

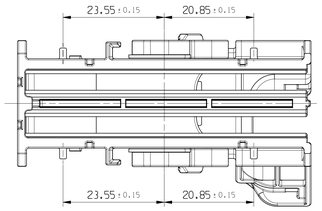

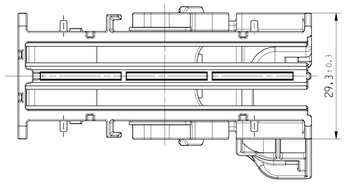

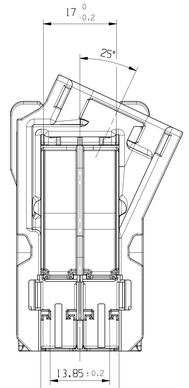

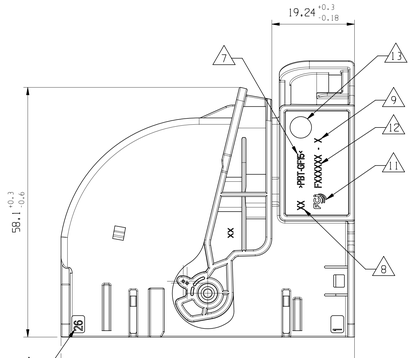

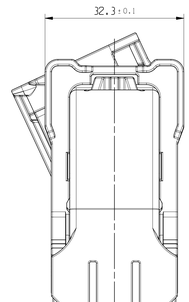

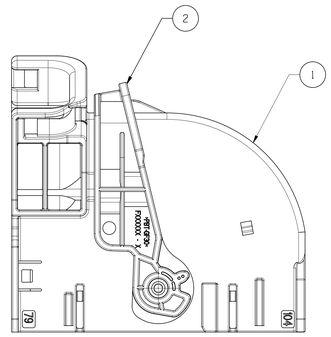

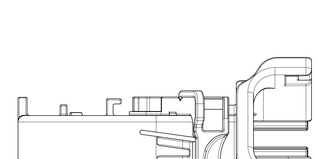

NOTE	SPECIFICATIONS
1	FEMALE CONNECTOR ACCORDING TO APTIV SPECIFICATION: CAQE TBD
2	FEMALE CONNECTOR ACCORDING TO: -TEMPERATURE CLASS T3 -ENGINE VIBRATOR CLASS V1 -SEALING CLASS - UNSEALED CONNECTOR
3	USER'S MANUAL: 33523055-CUS72-S01
4	DELIVERY CONNECTOR WEIGHT : SEE TABLE
5	NO WAFER HINGE OR WAFER HINGE BROKEN ALLOWED
6	VISUAL DEFECTS ON NO FUNCTIONNAL AREAS ALLOWED
A	MATERIAL MARKING
A	MOLD CAVITY NUMBER
A	PART REVISION NUMBER
A	WAY NUMBER
A	SUPPLIER LOGO
A	PART NUMBER
A	DATE INSERT

3D VIEW

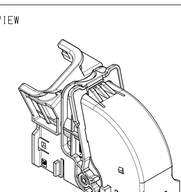

SCALE 1:1

OVERALL DIMENSION FOR MOUNTABILITY

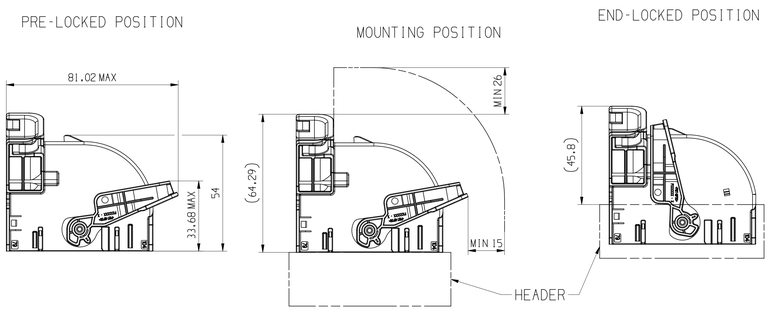

ASSOCIATED PARTS (FOR INFORMATION)

DESCRIPTION	MVL P/N	APTIV P/N
52W FEMALE MODULE LEFT	F427100	13762437
52W FEMALE MODULE RIGHT	F527100	13762438

WIRE OUTLET 25° LEFT DOWN (AT CAVITY 79)	CODE AL79	F446110	33514399	104W FEMALE MODULE HOLDER 25DEG	F346110	33523064	0.030	PBT-GF15	YELLOW	1
				LEVER CODE A	F890200	33523101		PBT-GF30	BLACK	2
	CODING	MVL P/N	APTIV P/N	DESCRIPTION	MVL P/N	APTIV PART NUMBER	WEIGHT (Kg)	MATERIAL	COLOR	NO.

A ——— LINE DRAWN THROUGH A PART NUMBER INDICATES THAT PHYSICAL PARTS ARE NOT AVAILABLE FOR ORDERING.

PART NUMBERS THAT DO NOT HAVE A LINE PRESENT INDICATE THAT PHYSICAL PARTS ARE AVAILABLE FOR ORDERING.

CONTACT APTIV SALES TO ASSURE AVAILABILITY OF PARTS.

DIM TO CHECK	DIMENSIONAL RANGE (MM)										CHART E1
	FROM	> 0	> 20	> 30	> 70	> 100	> 150	> 200	> 250	> 300	
	TO	20	30	70	100	150	200	250	300	400	
( ) DIM FOR HELP	TOLERANCE UNLESS OTHERWISE SPECIFIED										
THEORETIC DIM	±0.15	±0.2	±0.3	±0.4	±0.5	±0.6	±0.8	±1	±1.2		
	ANGULAR TOLERANCE ±2°										

UNLESS OTHERWISE SPECIFIED

GENERAL TOLERANCES ACCORDING TO:

SEE CHART

GD&T ACCORDING TO:

ISO1101

FIRST ANGLE PROJECTION

DO NOT SCALE

USE MATH DATA

CAD NX

DWG TYP: CUSTOMER PART DRAWING

WEIGHT (GR): SEE TABLE

VOLUME (CM³): - - -

ROUTING

DISTR CODE: D

REFERENCE: pcc0778648

MATERIAL: SEE TABLE

DRAWING NAME: 104-WAY MODULE HOLDER 25DEG CPL

DRAWING NUMBER: 33523055

SIZE	SCALE	FRAME NO	SHEET NO	STG	REV	N/P
A0	2:1	1 OF 1	2 OF 2	R	01	

•APTIV•

CONNECTION SYSTEMS

Chennai, India

COPYRIGHT 2021 APTIV. ALL RIGHTS RESERVED.

THIS DRAWING IS THE PROPERTY OF APTIV AND CONTAINS APTIV CONFIDENTIAL INFORMATION. THE REPRODUCTION, DISTRIBUTION AND UTILIZATION OF THIS DOCUMENT OR ITS RELATED CAD MATH DATA, AS WELL AS COMMUNICATION OF ANY CONTENT TO OTHERS, WITHOUT EXPRESS AUTHORIZATION, IS PROHIBITED.

		DATE
DR	P.BALAJI	16DE21
APVD1	LAGUETTE MAURICE	16DE21
APVD2	LAGUETTE MAURICE	16DE21
APVD3		
APVD4		
APVD5		

SUBSTANCES OF CONCERN AND RECYCLED CONTENT PER APTIV 10949001

User: KZ51M
Path: 33523055-CUS72-S01.dwg
Dataset: 33523055-CUS72-S01.prt
Time: 13:30:50