VAR	TITLE	PART-NO.:	PART-REV	DATE	AMOUNT	MATERIAL	SIMILAR TO RAL	NOTES
A	FEMALE CONNECTOR 16 WAY WITH CAP ASS.	13800155	03	14MY13	---	---	---	CONDITION OF DELIVERY, POS. 1-2 ASSEMBLED
1	FEMALE HOUSING 16 WAY WITH CAP	13800094	---	---	1	PA66 GRA	7001	ONLY ASSEMBLED PARTS AVAILABLE
2	PLR	13800104	---	---	1	PBT-GF20 XF YEL	1021	ONLY ASSEMBLED PARTS AVAILABLE
B	FEMALE CONNECTOR 16 WAY ASSEMBLY	13800154	03	13MY13	---	---	---	CONDITION OF DELIVERY, POS. 2-3 ASSEMBLED
3	FEMALE HOUSING 16 WAY	13800089	---	---	1	PA66 BLK	7001	ONLY ASSEMBLED PARTS AVAILABLE
2	PLR	13800104	---	---	1	PBT-GF20 XF YEL	1021	ONLY ASSEMBLED PARTS AVAILABLE

DWG STATUS DATE	STG	REV	N/P	CHG	ZONE	REVISION HISTORY	AUTH	DR	APVD 1	APVD 2
10DE09	R	01				INITIAL RELEASE		P.LES	M.MLE	M.SKR
28MY12	R	02		--	F8	DIM 37±0.15 WAS 37.2±0.1				
				--	D5	DIM 13.55 ADDED				
				--	D5	HOUSING GEOMETRY CHANGED				
				--	D8	PLR GEOMETRY CHANGED		P.LES	M.MLE	M.SKR
14MY13	R	03		--	D5	LOCKING FEATURE ON HOUSING MODIFIED		P.LES	M.MLE	M.SKR
26JN13	R	03	AA		G6	"INTERFACE CLIP HOLDER SUPPORT..." ADDED				
			AB		C6 C5 D5 D7	DIM SPC 26.75+0.35/-0.05 WAS SPC 26.75 DIM 13.55+0.15/-0.3 WAS 13.55 DIM 2.75+0.05/-0.15 WAS 2.75±0.05 GD&T ⌖ 0.2 CZ A WAS ⌖ 0.2 CZ A B C		P.LES	M.MLE	M.SKR

PART IN CLOSED POSITION

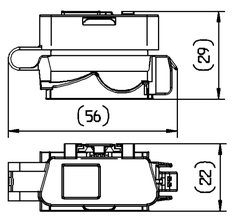

VAR B -PART-NO. 13800154

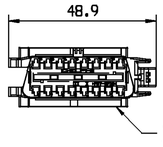

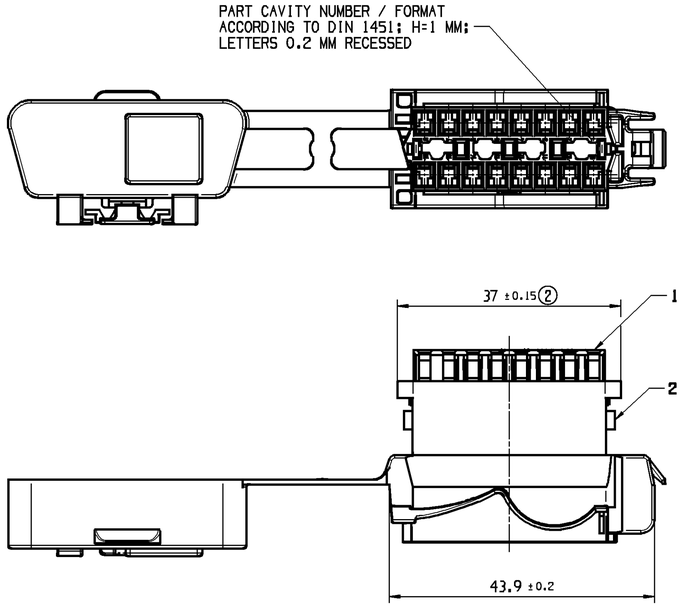

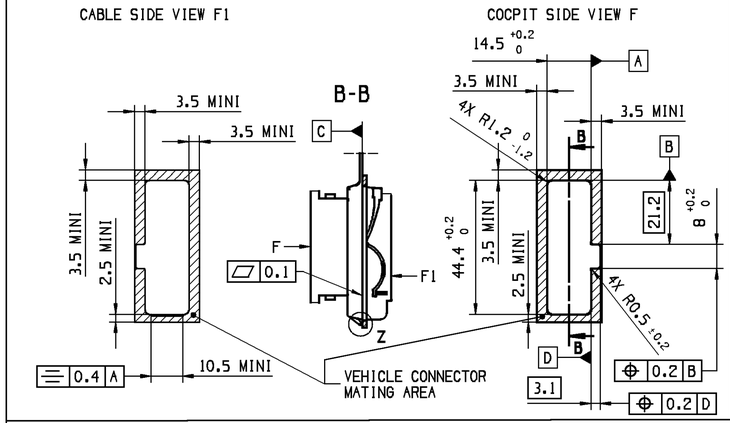

DETAIL Z EACH: 5:1

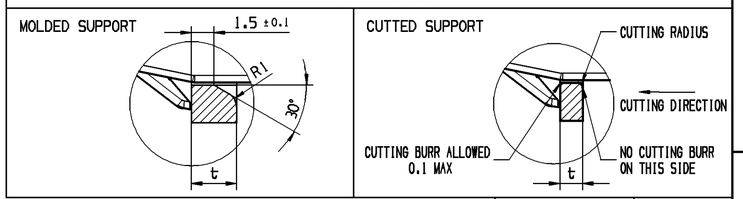

SUPPORT	t
CUTTED (STEEL)	1.5± 0.2
MOLDED: PA6.6-GF20 PA6.6-GF30 PBT-GF20 PBT-GF30	3.0± 0.2

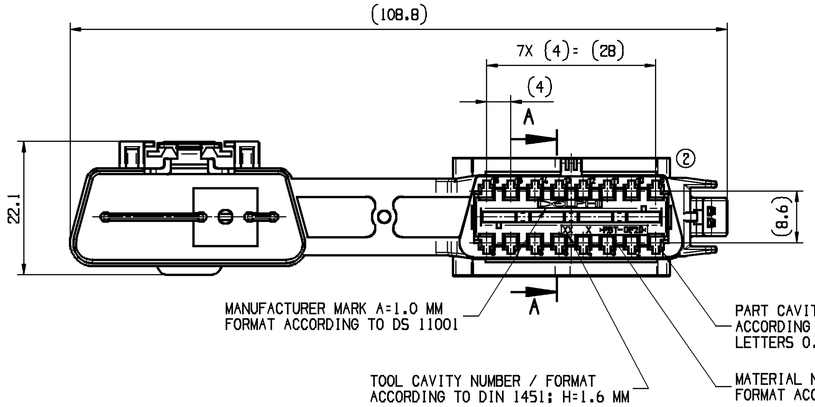

VIEW WITH PLR LOCKED

A-A

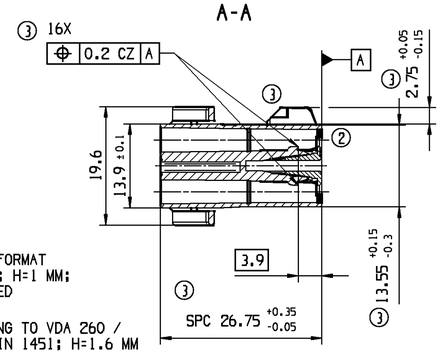

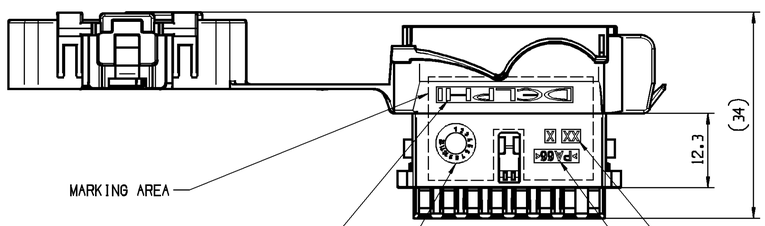

REMARKS:

- MAXIMUM DRAFT ANGLE 0°30
- LETTERS AND ENGRAVINGS 0.05/0.2 MM RAISED/RECESSED
- SPC: STATISTICAL PROCESS CONTROL
- FOR APPLICATION DATA SEE THE INDIVIDUAL APPLICATION DRAWINGS.

A ——— LINE DRAWN THROUGH A PART NUMBER INDICATES THAT PHYSICAL PARTS ARE NOT AVAILABLE FOR ORDERING.

PART NUMBERS THAT DO NOT HAVE A LINE PRESENT INDICATE THAT PHYSICAL PARTS ARE AVAILABLE FOR ORDERING.

CONTACT DELPHI SALES TO ASSURE AVAILABILITY OF PARTS.

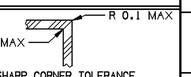

SHARP CORNER TOLERANCE

	DIMENSIONAL RANGE (MM)									CHART E1
DIM TO CHECK	FROM	> 0	> 20	> 30	> 70	>100	>150	>200	>250	>300
( ) DIM FOR HELP	TO	20	30	70	100	150	200	250	300	400
	TOLERANCE UNLESS OTHERWISE SPECIFIED									
THEORETIC DIM	±0.15	±0.2	±0.3	±0.4	±0.5	±0.6	±0.8	±1	±1.2	
	ANGULAR TOLERANCE ±2°									

SCALE: 1:1

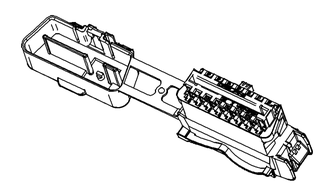

DWG TYP: PART DRAWING

WEIGHT (GR): 10.2 / 7.5

VOLUME (CM³): ---

ROUTING:

DISTR CODE: D

UNLESS OTHERWISE SPECIFIED

GENERAL TOLERANCES ACCORDING TO: SEE CHART

GD&T ACCORDING TO: ISO 1101

REFERENCE

FIRST ANGLE PROJECTION

DO NOT SCALE

USE MATH DATA

DELPHI

DELPHI PACKARD ELECTRICAL/ELECTRONIC ARCHITECTURE
KRAKOW,POLAND

COPYRIGHT 2009 DELPHI CORPORATION AND/OR ITS AFFILIATES.
ALL RIGHTS RESERVED.
REVISED 2013

THIS DRAWING IS THE PROPERTY OF DELPHI CORPORATION AND CONTAINS DELPHI CONFIDENTIAL INFORMATION. THE REPRODUCTION, DISTRIBUTION AND UTILIZATION OF THIS DOCUMENT OR ITS RELATED CAD MATH DATA, AS WELL AS COMMUNICATION OF ANY CONTENT TO OTHERS, WITHOUT EXPRESS AUTHORIZATION, IS PROHIBITED.

TEN RYSUNEK JEST WŁASNOŚCIĄ DELPHI CORPORATION I ZAWIERA POUFNE INFORMACJE POWIELANE, ROZPOWSZECHNIANE I WYKORZYSTYWANE TEGO DOKUMENTU LUB ZWIĄZANYCH Z NIM DANYCH CAD, JAK RÓWNIEŻ PRZEKAZYWANE INNYM JAKIEJKOLWIEK ICH ZAWARTOŚCI, BEZ NADANIA WYRAŹNYCH UPRAWNIEŃ, JEST ZABRONIONE

		DATE
DR	P.LESNIAK	09DE09
APVD1	M.MLECZKO	10DE09
APVD2	M.SIKORA	03MR11
APVD3		
APVD4		
APVD5		

SUBSTANCES OF CONCERN AND RECYCLED CONTENT PER DELPHI 10949001
SUBSTANCJE NIEBEZPIECZNE I PONTORNIE PRZETWORZONE OKREŚLA DELPHI 10949001

MATERIAL: SEE CHART

DRAWING NAME: OBD-2 FEMALE CONNECTOR 16WAY SICMA 1.5

DRAWING NUMBER: 13800105

SIZE	SCALE	FRAME NO	SHEET NO	STG	REV	N/P
A1	2:1	1 OF 1	1 OF 1	R	03	AB

CONTROLLED DOCUMENTS ARE ONLY AVAILABLE ON THE SERVER

Date: 26-Mar-14 Time: 10:08
Part: 13800105-CUSO3-S01
Page: 1 of 1
Message: