| COULEUR *COLOR* | CONDITIONNEMENT *PACKAGING* | QUANTITE *QUANTITY* |
|---|---|---|
| VERT *GREEN* | A13 | 80 000 |



SCALE 1:1

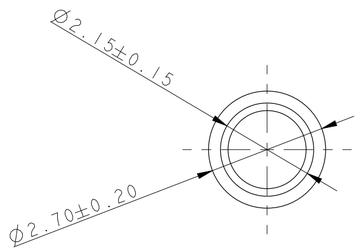


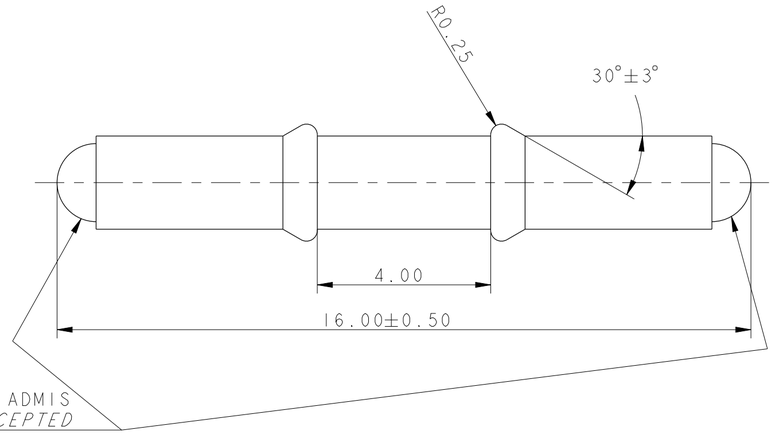


TETON OU MEPLAT ADMIS
*OVER THICKNESS OR FLAP SURFACE ACCEPTED*

| | PART NUMBER | PART REV. |
|---|---|---|
| MVL REF. | 210A015019 | D |
| DELPHI REF. | 15342610 | - |

| ECN-NO. *NUMERO ECN* | POSITION *POSITION* | CHANGE DESCRIPTION *MODIFICATION* |
|---|---|---|
| - | - | - |
| | - | - |
| | - | - |
| | - | - |
| | - | DELPHI P/N ADDED |

PRODUCT SPEC. *SPECIF. PRODUIT*: -
PACKAGING SPEC. *SPECIF. EMBALLAGE*: -
APPLICATION SPEC. *SPECIF. APPLICATION*: -

COPYRIGHT DELPHI CORPORATION AND/OR ITS AFFILIATES. ALL RIGHTS RESERVED. REVISED
THIS DRAWING IS THE PROPERTY OF DELPHI CORPORATION AND CONTAINS DELPHI CONFIDENTIAL INFORMATION. THE REPRODUCTION, DISTRIBUTION AND UTILIZATION OF THIS DOCUMENT OR ITS RELATED CAD MATH DATA, AS WELL AS COMMUNICATION OF ANY CONTENT TO OTHERS, WITHOUT EXPRESS AUTHORIZATION, IS PROHIBITED.
CE PLAN EST LA PROPRIETE DE DELPHI CORPORATION ET CONTIENT DES INFORMATIONS DELPHI CONFIDENTIELLES. LA REPRODUCTION, LA DISTRIBUTION ET L'UTILISATION DE CE DOCUMENT OU DE SES DONNEES MATHEMATIQUES CAO, AINSI QUE LA COMMUNICATION DE TOUT CONTENU A AUTRUI, SANS AUTORISATION EXPRESSE, EST INTERDITE.

TOLERANCES *TOLERANCES*: ±0.2 ±2°
MATERIAL : *MATIERE* : PBT non chargé
SURFACE FINISH *ETAT DE SURFACE*: -
COUNTERPART Nr. *CONTRE-PARTIE N°*: -
COLOUR : *COULEUR* : GREEN
DO NOT MEASURE DRAWING *NE PAS PRENDRE DE COTES*
TOOL NO. *OUTIL N°*: -
ECO Loc. Code *CODE B.E.*: FE

DELPHI
DELPHI PACKARD ELECTRICAL/ELECTRONIC ARCHITECTURE
EPERNON, FRANCE

CAD SYSTEM: pro / eng.
ISO PROJECTION *PROJECTION ISO*
DIMENSION IN MILLIMETERS *DIMENSIONS EN MILLIMETRES*
DWG SIZE *FORMAT*: A2

| | DATE *DATE* | NAME *NOM* |
|---|---|---|
| CREATED BY *CREE PAR* | 1995-12-14 | E.PHILIPPE |
| MODIFIED BY *MODIF. PAR* | 2013/07/11 | F.FAURIE |
| CHECKED BY *VERIF. PAR* | 2013/07/15 | S.LACOTE |
| APPROVED BY *APPR. PAR* | 2013/07/15 | L.ETIFIER |

TITLE *DESIGNATION*: 1.5 AND 2.8 CAVITY CAP
PROJECT *PROJET*: STANDARD CAP ANO
ESR NO. *NUMERO ESR*: STANDARD
CAT. NO. *NUMERO CAT.*: -
DOCUMENT UNDER PDS CONTROL *DOCUMENT GERE SOUS P.D.S.*
NO MODIFICATION ALLOWED OUTSIDE *PAS DE MODIFICATION EN DEHORS*
FILE NAME *NOM DE FICHIER*: PCC0781042

DRAWING NUMBER *REF. PLAN*: PCC0781042
REV. *IND.*: B
STATE *ETAT*: SERIAL RELEASED
PART NUMBER *REF. ARTICLE*: 210A015019
REV. *IND.*: D
APPROVAL LEVEL *NIV. D'APPROBATION*: -
SHEET *FEUILLE*: 1 of / sur 1
SCALE *ECH.*: 10:1

EUR C04 112 F29 PDS