SYMBOL DEFINITION		
A DIMENSION WITHOUT AN INSPECTION REPORT SYMBOL ( ) DOES NOT REQUIRE INSPECTION. IT MAY BE CONTROLLED ON THE INDIVIDUAL COMPONENT DRAWING.	TOTAL NO OF INSPECTIONS REQUIRED	377
	LAST NO. USED	27

MISSING SYMBOLS
NO MISSING SYMBOL NUMBER

DWG STATUS					ZONE	REVISION HISTORY	AUTH	DR	APVD1	APVD2
DATE	STG	REV	N/P	CHG						
31JA23	R	01	-	-		INITIAL RELEASE	448720	DH	YFC	XC
06JN23	R	02	-	-		ADDED DIM#26 , #27 ADDED TOL. OF DIM#15,#24 UPDATED NOTES #1,#5	449295	YFC	XC	YFC

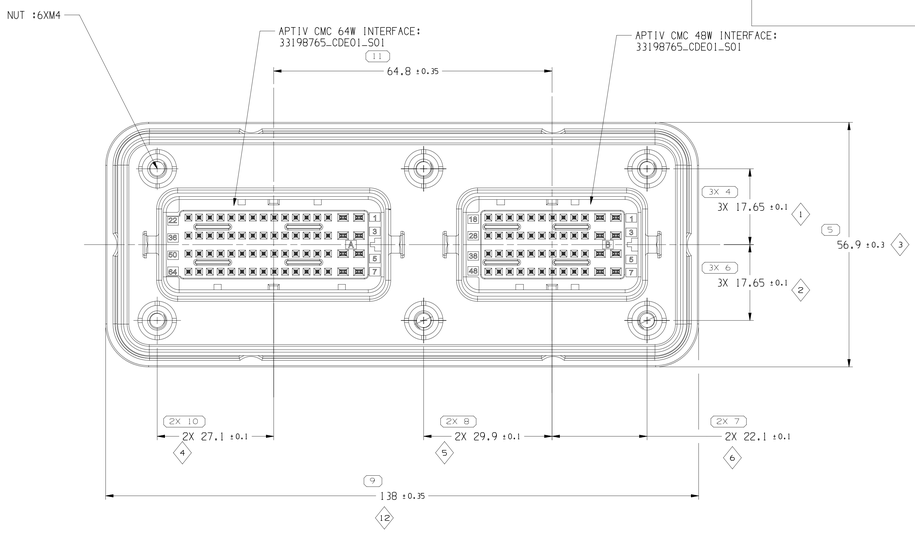

KEY PRODUCT CHARACTERISTICS			
SAFETY/COMPLIANCE	FIT/FUNCTION	TOTAL ON DRAWING	13
S/C CHECKPOINTS	F/F CHECKPOINTS	LAST NO. USED	13

NO & TYPE		DESCRIPTION	RATIONALE	PTS	ZONE
1	F/F	BUSHING POSITION	MATING DIMENSION	1	K9
2	F/F	BUSHING POSITION	MATING DIMENSION	1	K9
3	F/F	CONNECTOR WIDTH	MATING DIMENSION	1	K8
4	F/F	BUSHING POSITION	MATING DIMENSION	1	J13
5	F/F	BUSHING POSITION	MATING DIMENSION	1	J11
6	F/F	BUSHING POSITION	MATING DIMENSION	1	J9
7	F/F	CONNECTOR HEIGHT	MATING DIMENSION	1	G9
8	F/F	PIN POSITION ON PCB SIDE	MATNG WITH PCB	1	F14
9	F/F	PIN POSITION ON PCB SIDE	MATNG WITH PCB	1	E14
10	F/F	PIN POSITION ON PCB SIDE	MATNG WITH PCB	1	C14
11	F/F	PIN POSITION ON PCB	MATNG WITH PCB	1	B14
12	F/F	CONNECTOR LENGTH	MATING DIMENSION	1	H11
13	F/F	PIN HEIGHT	MATING WITH PCB	1	F9

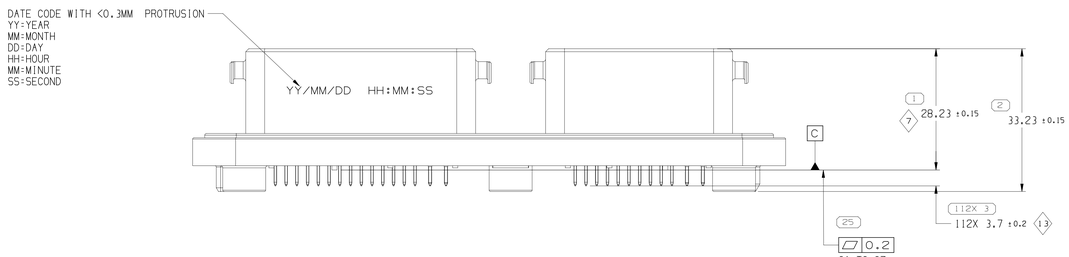

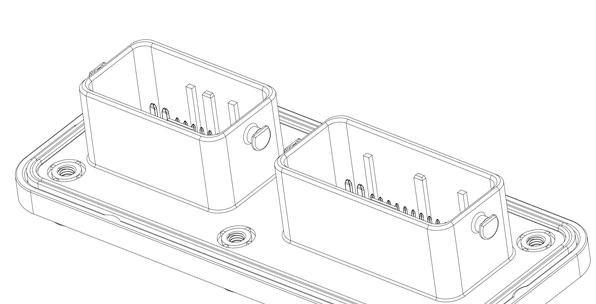

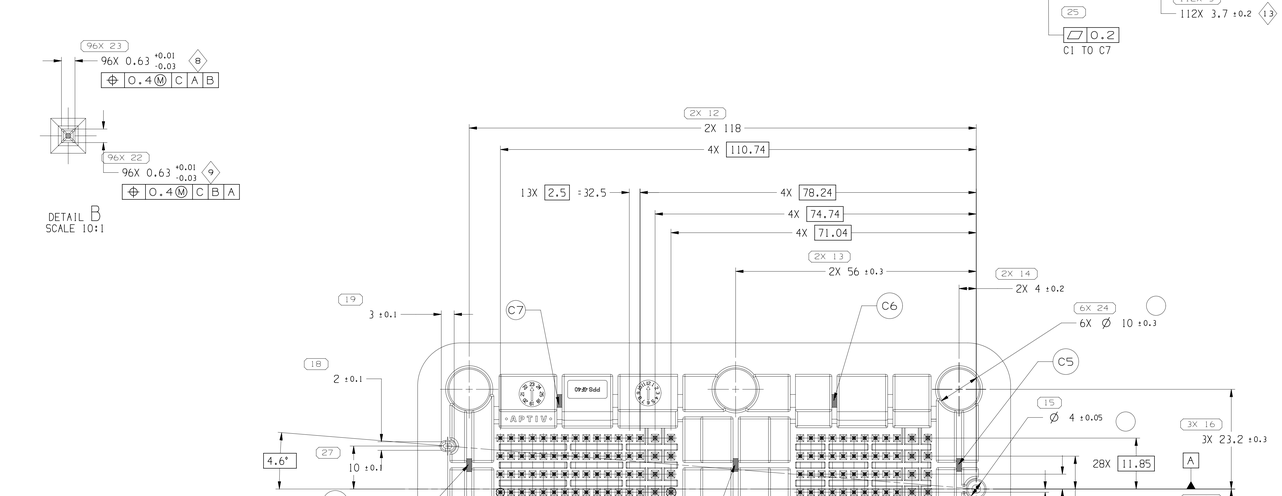

9 PROCESS SENSITIVE DIMENSION
DIMENSIONS ENCLOSED IN ( ) INDICATE REFERENCE DIMENSIONS AND NO TOLERANCE LIMITS ARE ESTABLISHED

DIMENSIONAL RANGE (MM)											CHART E1
FROM	> 0	> 20	> 30	> 70	>100	>150	>200	>250	>300		
TO	20	30	70	100	150	200	250	300	400		
TOLERANCE UNLESS OTHERWISE SPECIFIED											
	±0.15	±0.2	±0.3	±0.4	±0.5	±0.6	±0.8	±1	±1.2		
ANGULAR TOLERANCE ±2°											

THIRD ANGLE PROJECTION

DO NOT SCALE

USE MATH DATA

NX

A LINE DRAWN THROUGH A PART NUMBER INDICATES THAT PHYSICAL PARTS ARE NOT AVAILABLE FOR ORDERING.

PART NUMBERS THAT DO NOT HAVE A LINE PRESENT INDICATE THAT PHYSICAL PARTS ARE AVAILABLE FOR ORDERING.

CONTACT APTIV SALES TO ASSURE AVAILABILITY OF PARTS.

DWG TYPE: PART DRAWING

STYLE: -

VOLUME (CM³)

DISTR CODE

UNLESS OTHERWISE SPECIFIED

THIS DOCUMENT IS IN ACCORDANCE WITH ASME Y14.5-2009. SEE APTIV ENGINEERING DESIGN STANDARD B6 2017 FOR ISO 11012:2004 RECONCILIATION REQUIREMENTS.

ALL DIMENSIONS ARE IN MILLIMETERS

REFERENCE: -

•APTIV•

CONNECTION SYSTEMS

Anting, China

COPYRIGHT 2023 APTIV. ALL RIGHTS RESERVED.

THIS DRAWING IS THE PROPERTY OF APTIV AND CONTAINS APTIV CONFIDENTIAL INFORMATION. THE REPRODUCTION, DISTRIBUTION AND UTILIZATION OF THIS DOCUMENT OR ITS RELATED CAD MATH DATA, AS WELL AS COMMUNICATION OF ANY CONTENT TO OTHERS, WITHOUT EXPRESS AUTHORIZATION, IS PROHIBITED.

		DATE
DR		
APVD1	YUFENG CHEN	17FE23
APVD2	XING CHEN	17FE23
APVD3	YUFENG CHEN	17FE23
APVD4		
APVD5		

SUBSTANCES OF CONCERN AND RECYCLED CONT[0949001] [0949010]

MATERIAL: SEE NOTES

DRAWING NAME: ASM CONN 112 M 0.64 HEADER

DRAWING NUMBER: 35736977

SIZE	SCALE	FRAME NO	SHEET NO	STG	REV	N/P
A0	2:1	1 OF 2	1 OF 3	R	02	-

User: LEBCH
Date: 02-Sep-23 Time: 17:46:06
Form: PS_B0_0722_CUSTOM_S01.frm
Dwg: PS_B0_0722_CUSTOM_S01.dwg