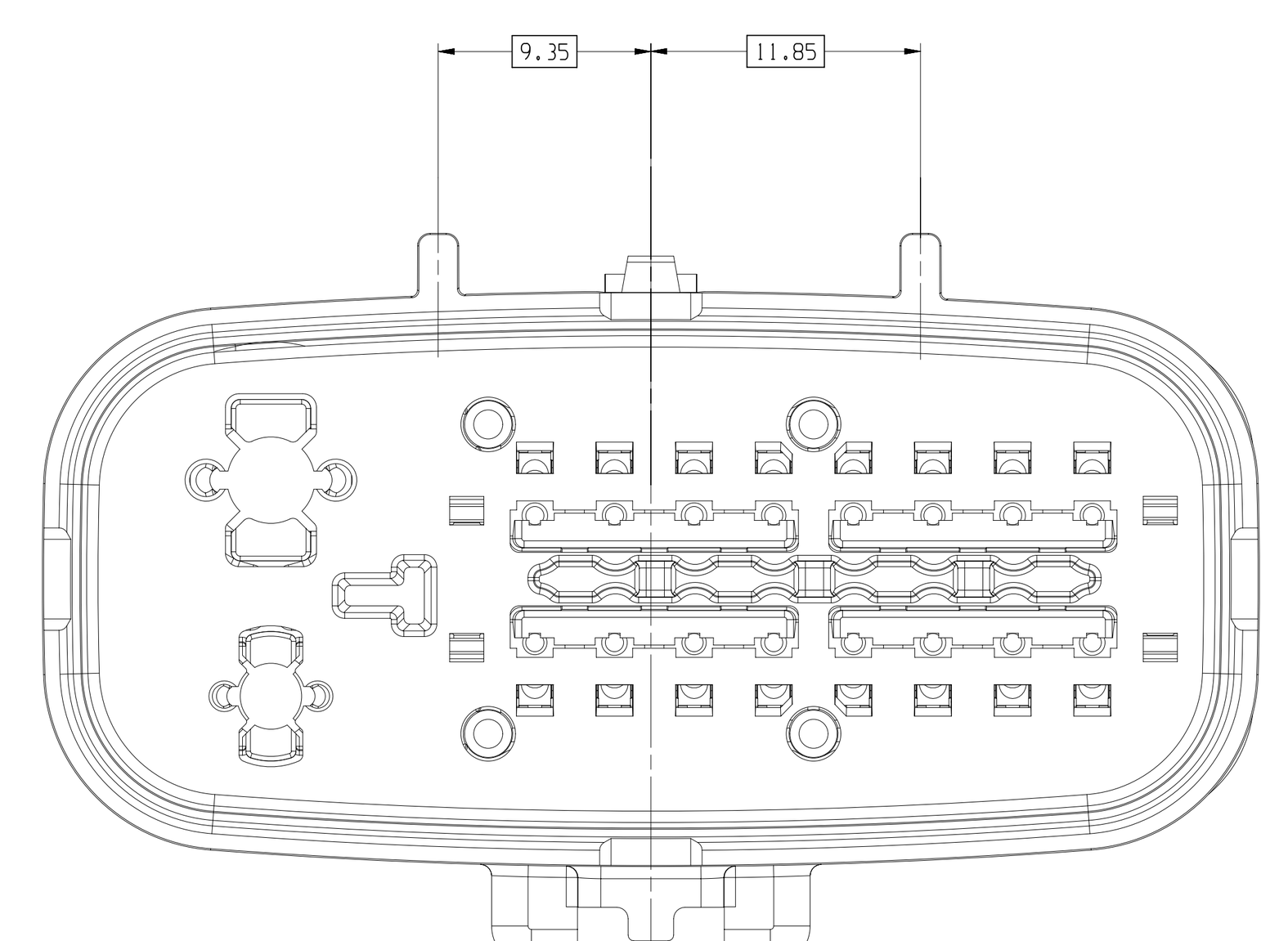

TYPE 102
SAME AS TYPE 101
EXCEPT AS SHOWN

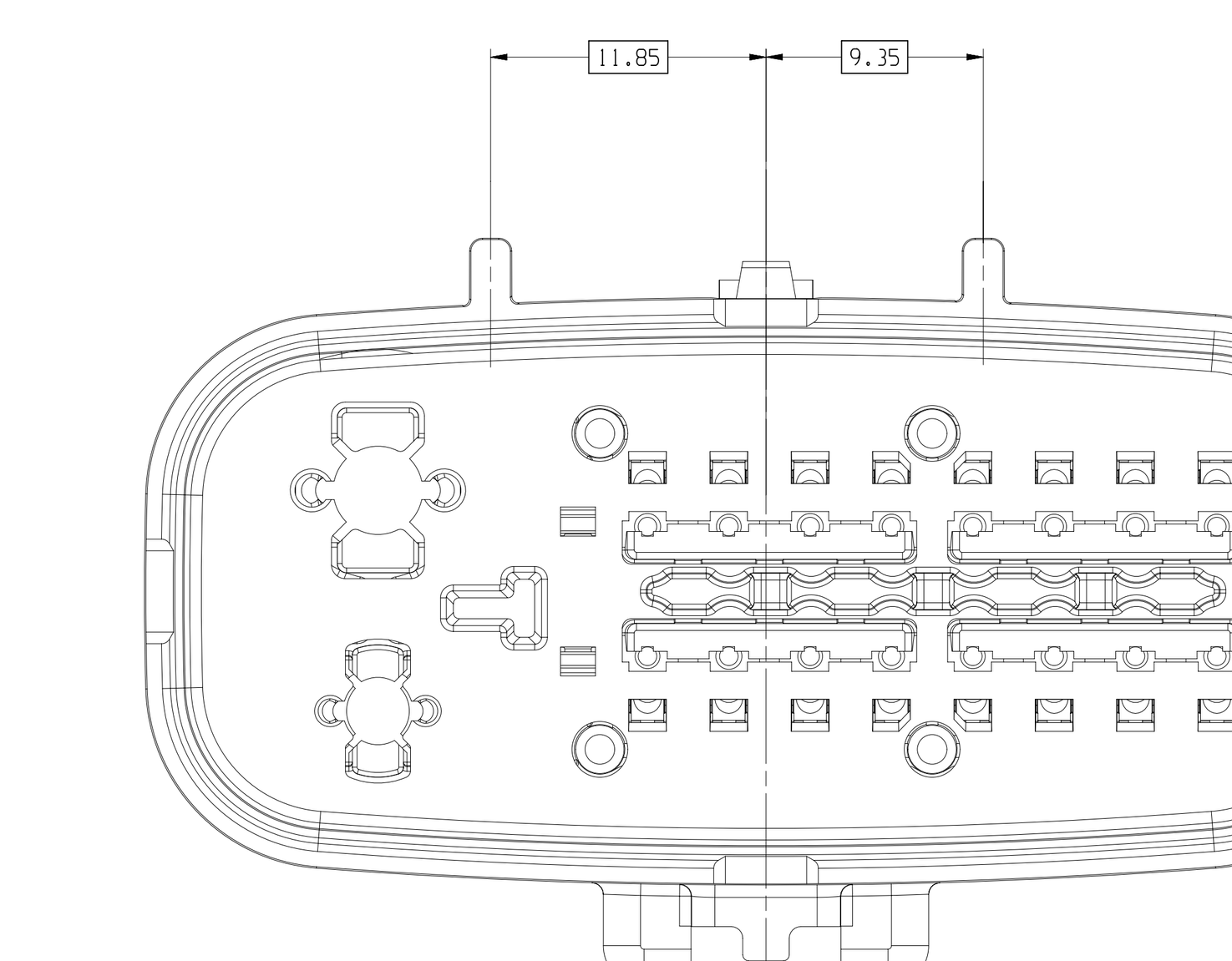

TYPE 103
SAME AS TYPE 101
EXCEPT AS SHOWN

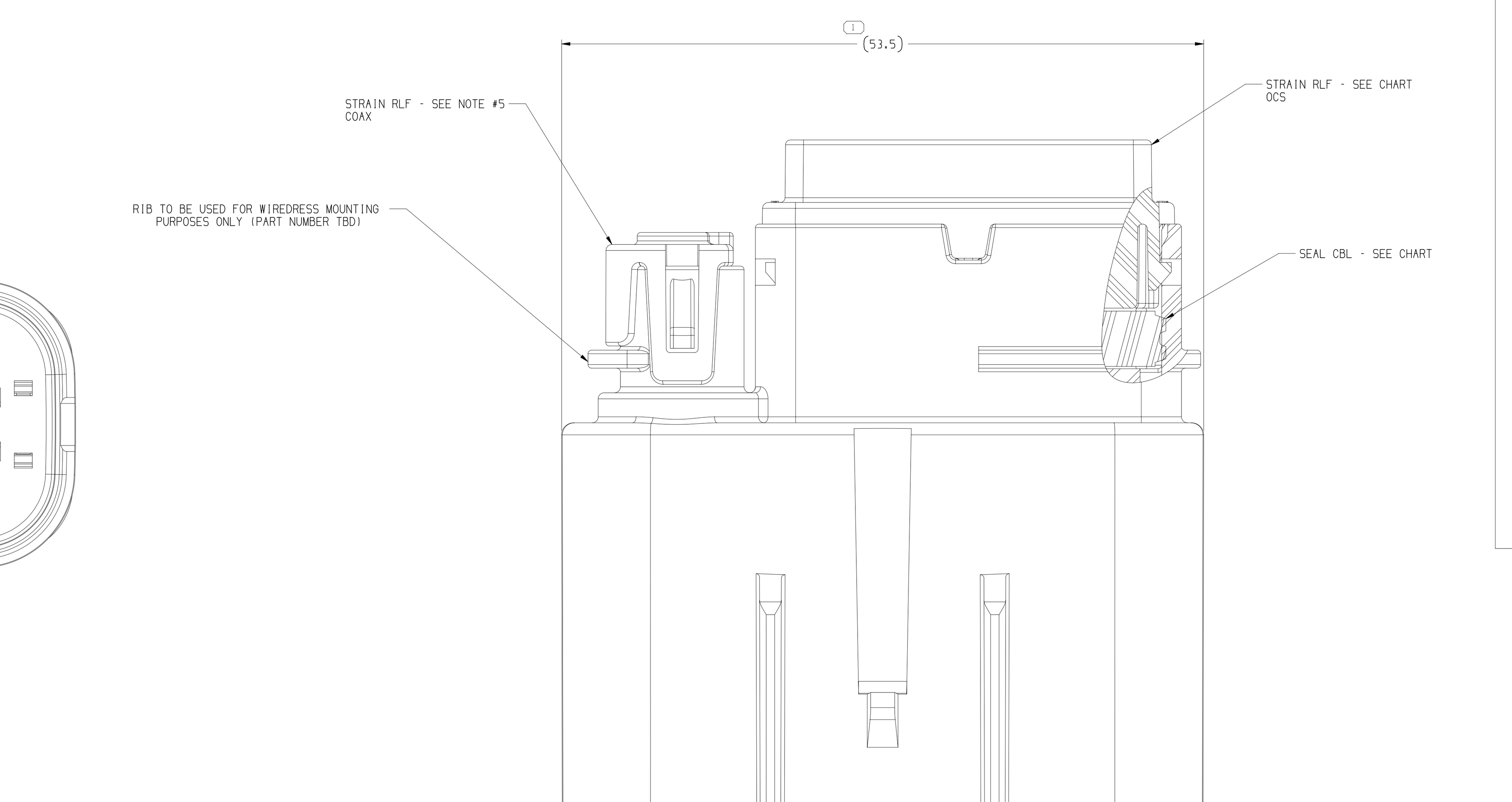

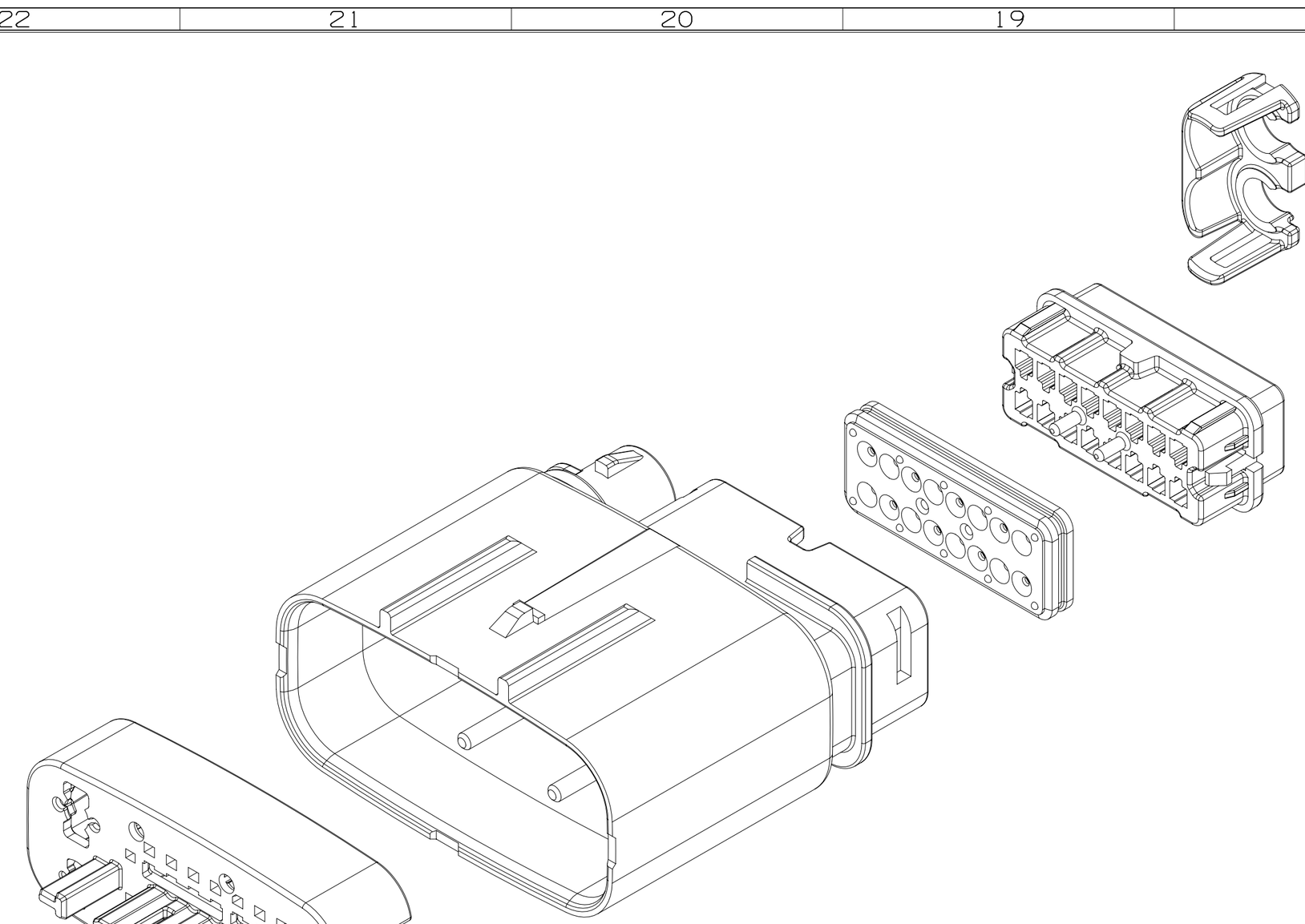

EXPLODED VIEW
SCALE 2:1

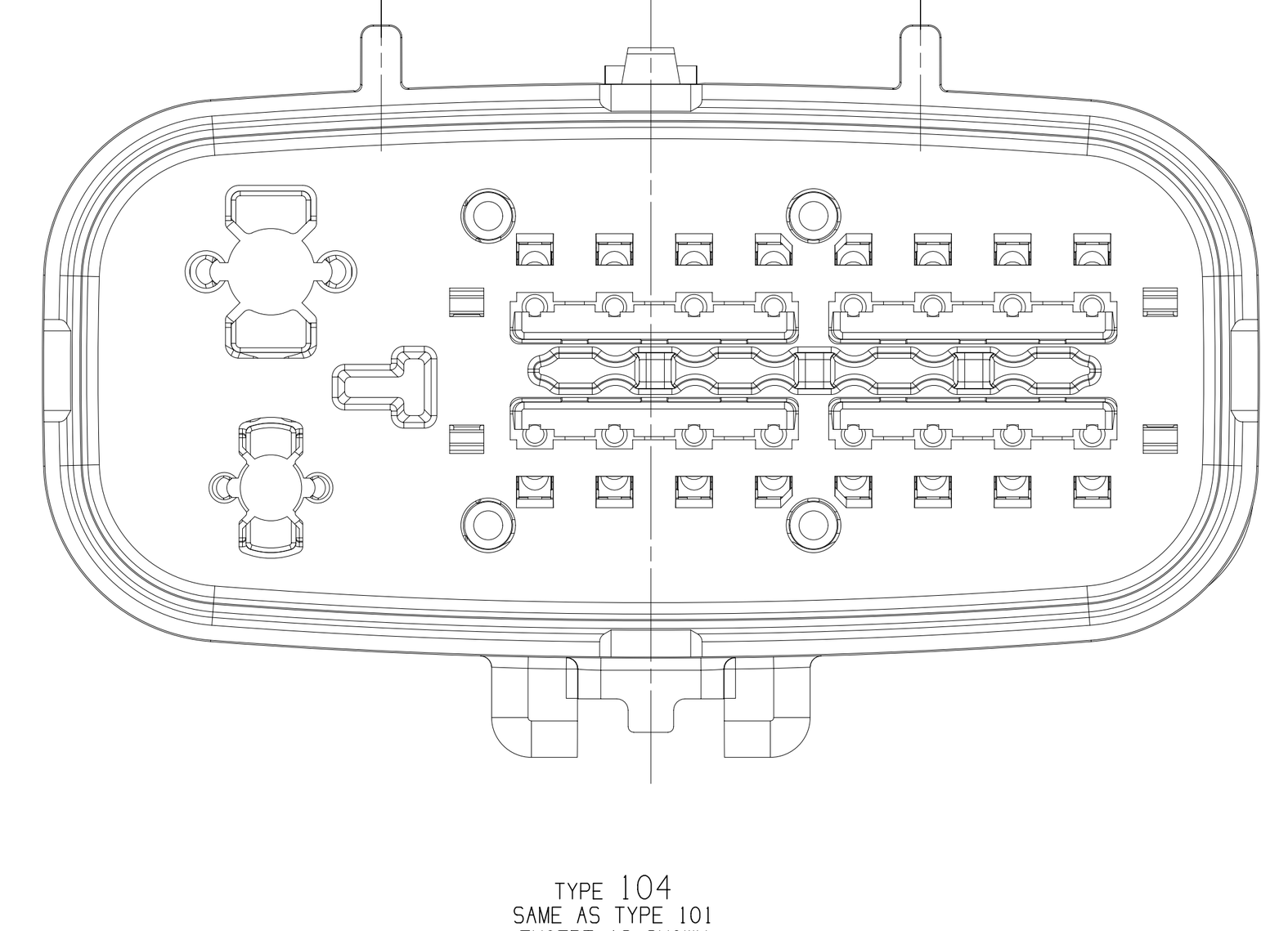

TYPE 104
SAME AS TYPE 101
EXCEPT AS SHOWN

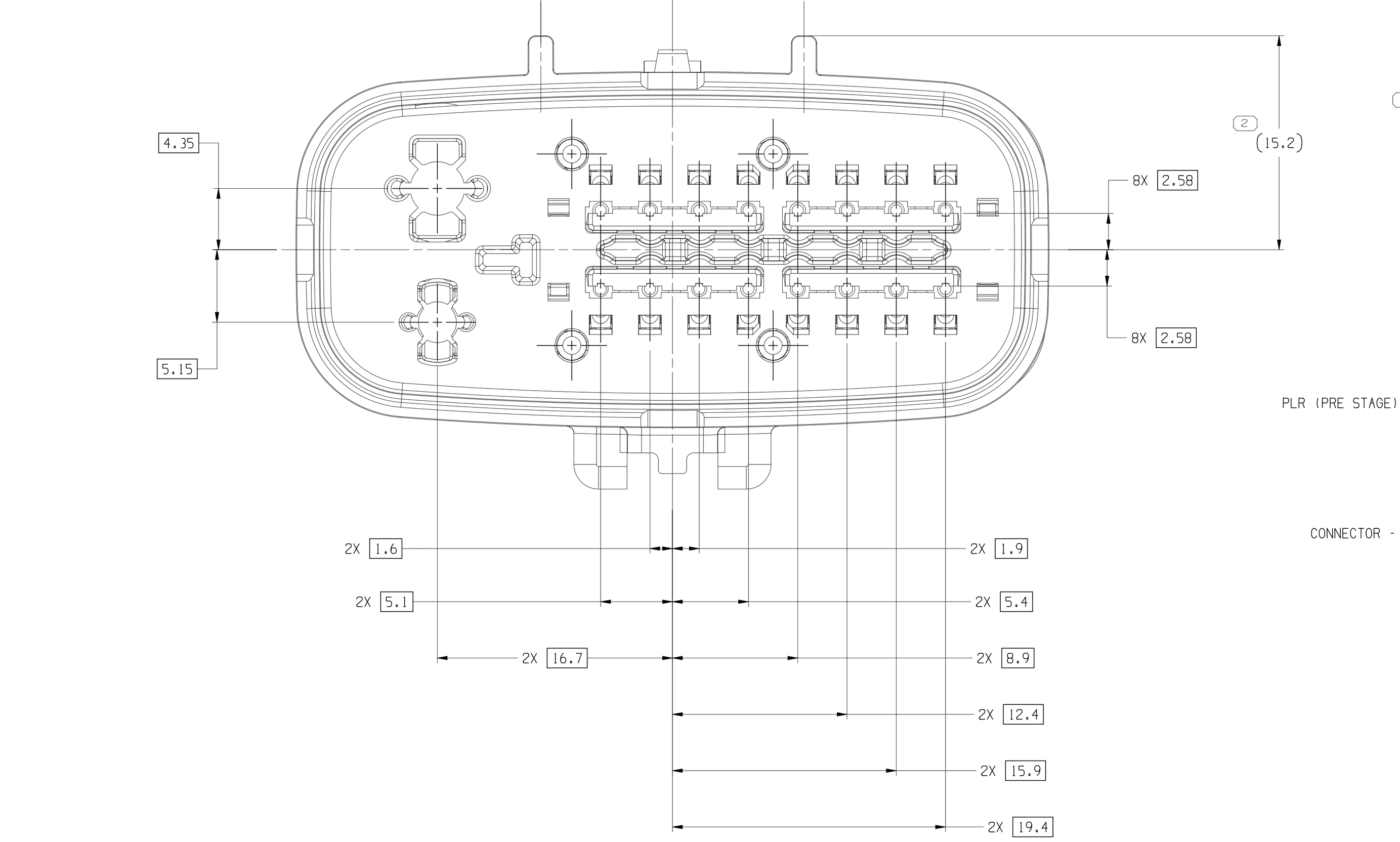

TYPE 101

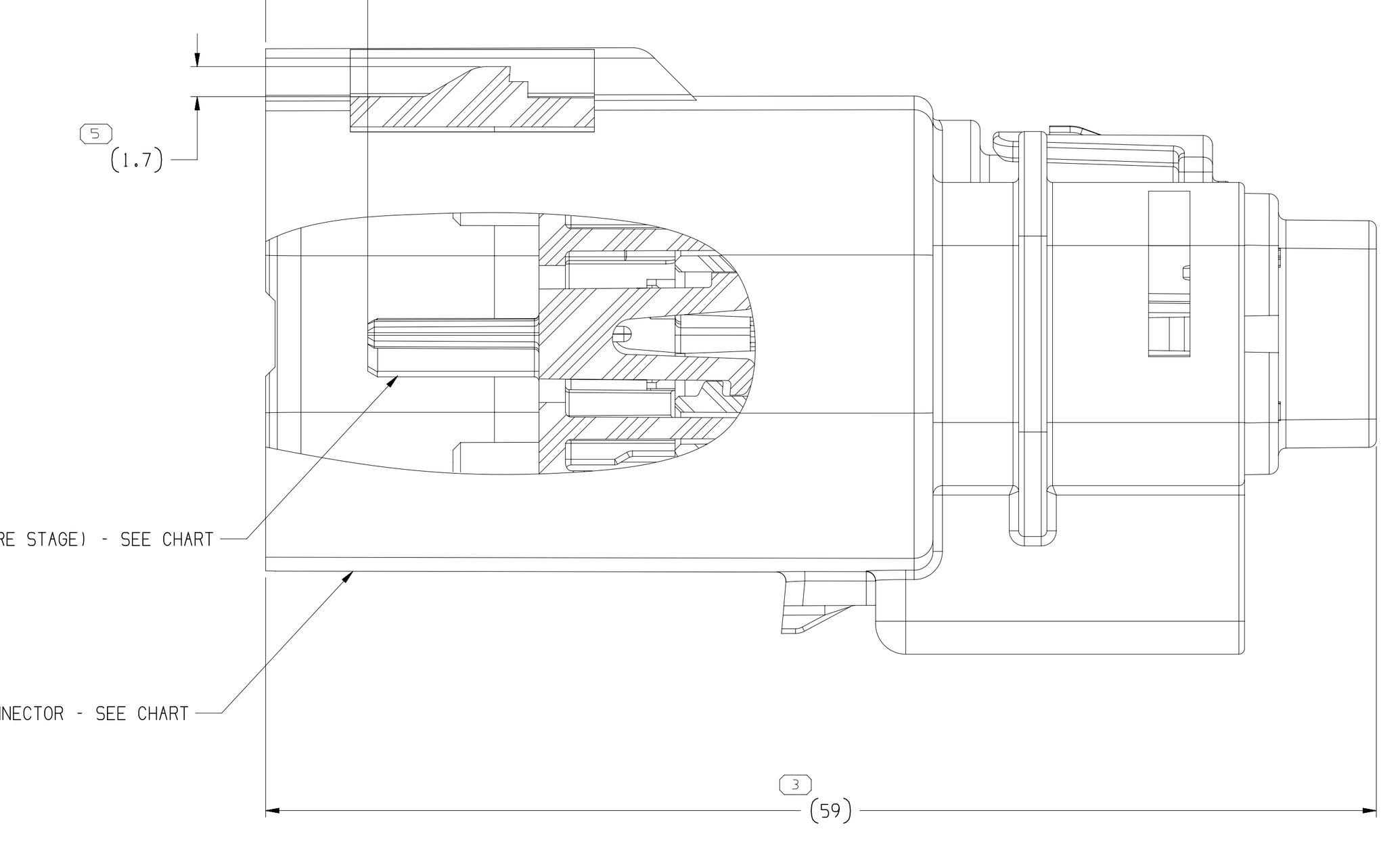

PART NO	REV	N/P	TYPE	CODE	STANDARD BLOCKED CAVITIES	MINI	1 (HOLE PUNCH PATTERN FOR BLOCKED OCS CAVITIES)	2	3	4	5	6	7	8	9	10	11	12	13	14	15	16	CONNECTOR	PLR	SEAL CBL	STRAIN RLF OCS	REPLACED BY	STATUS
35806992	01	-	101	A		X					5								13				35641479	35641506	15521007	35806995	-	
35806979	01	-	101	A	X	X					5			8	9	10	11	12	13	14	15	16	35641480	35641506	15521007	35806982	-	
35641502	02	AA	101	A		X																	35641479	35641506	15521007	15514457	-	
35641501	02	AA	101	A	X	X																	35641480	35641506	15521007	15514457	-	
35641500	02	AA	101	A		X											X	X	X	X	X	X	35641479	35641506	15521007	35476726	-	
35641499	02	AA	101	A	X	X				X	X		X	X			X	X	X	X	X	X	35641480	35641506	15521007	35476727	-	
35641497	02	AA	101	A	X	X							X	X			X	X	X	X	X	X	35641480	35641506	15521007	35476728	-	
35641495	02	AA	101	A		X								X			X	X	X	X	X	X	35641479	35641506	15521007	35476729	-	
35641494	02	AA	101	A		X													X	X	X	X	35641479	35641506	15521007	35123815	-	
35641493	02	AA	101	A	X	X													X	X	X	X	35641480	35641506	15521007	35123815	-	
35641492	02	AA	101	A	X	X				X	X		X	X		X			X	X	X	X	35641480	35641506	15521007	35476730	-	
35641491	02	AA	101	A	X	X				X	X		X	X		X	X	X	X	X	X	X	35641480	35641506	15521007	35476731	-	
35641490	02	AA	101	A	X	X							X	X		X			X	X	X	X	35641480	35641506	15521007	35476732	-	
35641489	02	AA	101	A	X	X							X	X		X	X	X	X	X	X	X	35641480	35641506	15521007	35476733	-	
35641488	02	AA	101	A		X										X			X	X	X	X	35641479	35641506	15521007	35476734	-	
35641487	02	AA	101	A		X										X	X	X	X	X	X	X	35641479	35641506	15521007	35476735	-	
35641486	02	AA	101	A		X								X					X	X	X	X	35641479	35641506	15521007	35476736	-	
35641485	02	AA	101	A		X								X			X	X	X	X	X	X	35641479	35641506	15521007	35476729	-	
35641484	02	AA	101	A	X	X							X	X					X	X	X	X	35641480	35641506	15521007	35476738	-	
35641481	02	AA	101	A	X	X							X	X			X	X	X	X	X	X	35641480	35641506	15521007	35476728	-	
35585551	01	AA	101	A	X	X							X	X			X	X	X	X	X	X	35585498	35331386	15521007	35476728	35641481	ACTIVE/RESTRICTED
35585550	01	AA	101	A	X	X							X	X					X	X	X	X	35585498	35331386	15521007	35476738	35641484	ACTIVE/RESTRICTED
35585549	01	AA	101	A		X								X			X	X	X	X	X	X	35585496	35331386	15521007	35476729	35641485	ACTIVE/RESTRICTED
35585548	01	AA	101	A		X								X					X	X	X	X	35585496	35331386	15521007	35476736	35641486	ACTIVE/RESTRICTED
35585547	01	AA	101	A		X										X	X	X	X	X	X	X	35585496	35331386	15521007	35476735	35641487	ACTIVE/RESTRICTED
35585546	01	AA	101	A		X										X			X	X	X	X	35585496	35331386	15521007	35476734	35641488	ACTIVE/RESTRICTED
35585522	01	AA	101	A	X	X							X	X		X	X	X	X	X	X	X	35585498	35331386	15521007	35476733	35641489	ACTIVE/RESTRICTED
35585521	01	AA	101	A	X	X							X	X		X			X	X	X	X	35585498	35331386	15521007	35476732	35641490	ACTIVE/RESTRICTED
35585520	01	AA	101	A	X	X				X	X		X	X		X	X	X	X	X	X	X	35585498	35331386	15521007	35476731	35641491	ACTIVE/RESTRICTED
35585519	01	AA	101	A	X	X				X	X		X	X		X			X	X	X	X	35585498	35331386	15521007	35476730	35641492	ACTIVE/RESTRICTED
35585518	01	AA	101	A	X	X													X	X	X	X	35585498	35331386	15521007	35123815	35641493	ACTIVE/RESTRICTED
35585517	01	AA	101	A		X													X	X	X	X	35585496	35331386	15521007	35123815	35641494	ACTIVE/RESTRICTED
35585516	01	AA	101	A		X								X			X	X	X	X	X	X	35585496	35331386	15521007	35476729	35641495	ACTIVE/RESTRICTED
35585515	01	AA	101	A	X	X							X	X			X	X	X	X	X	X	35585498	35331386	15521007	35476728	35641497	ACTIVE/RESTRICTED
35585514	01	AA	101	A	X	X				X	X		X	X			X	X	X	X	X	X	35585498	35331386	15521007	35476727	35641499	ACTIVE/RESTRICTED
35585510	01	AA	101	A		X											X	X	X	X	X	X	35585496	35331386	15521007	35476726	35641500	ACTIVE/RESTRICTED
35585504	01	AA	101	A	X	X																	35585498	35331386	15521007	15514457	35641501	ACTIVE/RESTRICTED
35585501	01	AA	101	A		X																	35585496	35331386	15521007	15514457	35641502	ACTIVE/RESTRICTED
35470996	03	-	101	A	X	X							X	X			X	X	X	X	X	X	35359348	35331386	15521007	35476728	35585551	
35470995	03	-	101	A	X	X							X	X					X	X	X	X	35359348	35331386	15521007	35476738	35585550	
35470994	03	AA	101	A		X								X			X	X	X	X	X	X	35359342	35331386	15521007	35476729	35585549	ACTIVE/RESTRICTED
35470993	03	AA	101	A		X								X					X	X	X	X	35359342	35331386	15521007	35476736	35585548	ACTIVE/RESTRICTED
35470937	03	-	101	A		X										X	X	X	X	X	X	X	35359342	35331386	15521007	35476735	35585547	
35470936	03	AA	101	A		X										X			X	X	X	X	35359342	35331386	15521007	35476734	35585546	ACTIVE/RESTRICTED
35470935	03	-	101	A	X	X							X	X		X	X	X	X	X	X	X	35359348	35331386	15521007	35476733	35585522	
35470934	03	-	101	A	X	X							X	X		X			X	X	X	X	35359348	35331386	15521007	35476732	35585521	
35470933	03	-	101	A	X	X				X	X		X	X		X	X	X	X	X	X	X	35359348	35331386	15521007	35476731	35585520	
35470932	03	-	101	A	X	X				X	X		X	X		X			X	X	X	X	35359348	35331386	15521007	35476730	35585519	
35464858	04	-	101	A	X	X													X	X	X	X	35359348	35331386	15521007	35123815	35585518	
35464857	04	-	101	A		X													X	X	X	X	35359342	35331386	15521007	35123815	35585517	
35464856	04	-	101	A		X								X			X	X	X	X	X	X	35359342	35331386	15521007	35476729	35585516	
35464855	04	-	101	A	X	X							X	X			X	X	X	X	X	X	35359348	35331386	15521007	35476728	35585515	
35464854	04	-	101	A	X	X				X	X		X	X			X	X	X	X	X	X	35359348	35331386	15521007	35476727	35585514	
35464853	04	-	101	A		X											X	X	X	X	X	X	35359342	35331386	15521007	35476726	35585510	
35359413	05	-	104	D	X	X																	35359352	35641506	15521007	15514457	-	
35359411	05	-	103	C	X	X																	35359351	35641506	15521007	15514457	-	
35359410	05	-	102	B	X	X																	35359350	35641506	15521007	15514457	-	
35359408	04	-	101	A	X	X																	35359348	35331386	15521007	15514457	35585504	
35359401	05	-	104	D		X																	35359346	35641506	15521007	15514457	-	
35359400	05	-	103	C		X																	35359344	35641506	15521007	15514457	-	
35359399	05	-	102	B		X																	35359343	35641506	15521007	15514457	-	
35359397	04	AA	101	A		X																	35359342	35331386	15521007	15514457	35585501	ACTIVE/RESTRICTED
35359395	05	-	104	D	X																		35359341	35641506	15521007	15514457	-	
35359394	05	-	103	C	X																		35359340	35641506	15521007	15514457	-	
35359392	05	-	102	B	X																		35359339	35641506	15521007	15514457	-	
35359391	05	-	101	A	X																		35359338	35641506	15521007	15514457	-	
35331371	05	-	104	D																			35331356	35641506	15521007	15514457	-	
35331370	05	-	103	C																			35331355	35641506	15521007	15514457	-	
35331367	05	-	102	B																			35331354	35641506	15521007	15514457	-	
35331366	05	AA	101	A																			35331353	35641506	15521007	15514457	-	

SYMBOL DEFINITION		
A DIMENSION WITHOUT AN INSPECTION REPORT SYMBOL ( ) OR ( ) DOES NOT REQUIRE INSPECTION. IT MAY BE CONTROLLED ON THE INDIVIDUAL COMPONENT DRAWING.	TOTAL NO OF INSPECTIONS REQUIRED	5
( ) INDICATES THE DIMENSION IS SHOWN ON THE PART DRAWING AND THE TOOL MUST BE QUALIFIED AT 80% OF THE TOLERANCE SHOWN UNLESS SUPERSEDED BY A "TBT".	LAST NO. USED	5

MISSING SYMBOLS
NO MISSING SYMBOL NUMBER

DATE	STG	REV	N/P	CHG	ZONE	REVISION HISTORY	AUTH	DR	APVD 1	APVD 2
24JN19	R	01	-	-		35331366 WAS PE432183 AND RELEASED PART DRAWING, 35331367 WAS PE432185 AND RELEASED PART DRAWING, 35331370 WAS PE432186 AND RELEASED PART DRAWING, 35331371 WAS PE432187 AND RELEASED PART DRAWING. 35359391, 35359392, 35359394, 35359395, 35359397 ,35359399-35359401, 35359408, 35359410, 35359411, 35359413 RELEASED PART DRAWING	443557	RAK	SNS	DJS
10DE19	R	02	-	-		REMOVED COAX STRAIN RELIEF FROM CHART AND ADDED NOTE #5	550659	RAK	RAK	DJS
12MY20	R	03	-	-		35464853-58 - RELEASED PART DRAWING; ALL PARTS - REVISED GRAPHICS	551568	RAK	RAK	DJS
25JN20	R	04	-	-		35359397, 35359408, 35464853-58 - UPDATED PART AVAILABILITY	551837	RAK	RAK	DJS
08JL20	R	05	-	-		35470932-37, 35470993-96 - RELEASED. 35464853-58 UPDATED STRAIN RELIEF PART NUMBERS.	551714	ATP	RAK	DJS
11JA21	R	06	-	-		ALL PARTS - REVISED GRAPHICS AND ADDED DIM #5	553293	RAK	RAK	DJS
29MR21	R	07	-	-		REVISED CHART TO SHOW BLOCKED CAVITIES.	553881	RAK	RAK	DJS
30JL21	R	08	-	-		35359397, 35359408, 35464853-58, 35470932-37, 35470993-96 - OBSOLETE AND REPLACED BY; 35331366-67,35331370-71, 35359391-92,94,95,99, 35359400-01, 35359410-11 & 13 - ADDED DRESSCOVER RIB NOTE AND REVISED DRESSCOVER RIB THICKNESS	554653	RAK	RAK	DJS
29AP22	R	09	-	-		REVISED CHART TO ADD CODE & STATUS COLUMN AND REVISED NOTE 5	556908	AN	RAK	DJS
15SE22	R	10	-	-		35641481, 35641484-95, 35641497, 35641499-502 REPLACED CONNECTOR PART NO IN CHART	558485	RV	RAK	DJS
06DE22	R	11	-	-		35641487-88 - UPDATED PART AVAILABILITY (P/N'S WERE NOT AVAILABLE)	559128	GDH	JGO	DJS
24JA23	R	12	-	-		35331366 - UPDATED PART AVAILABILITY	559425	KPS	RAK	DJS
25AP23	R	13	-	-	-	35641481,35641484-86,35641489-95, 35641497,35641499,35641500-02-UPDATED PART AVAILABILITY	560099	RV	RAK	DJS
17AU23	R	14	-	-		ADDED P/N 35806979 & 35806992.	561412	GL	KV	DV

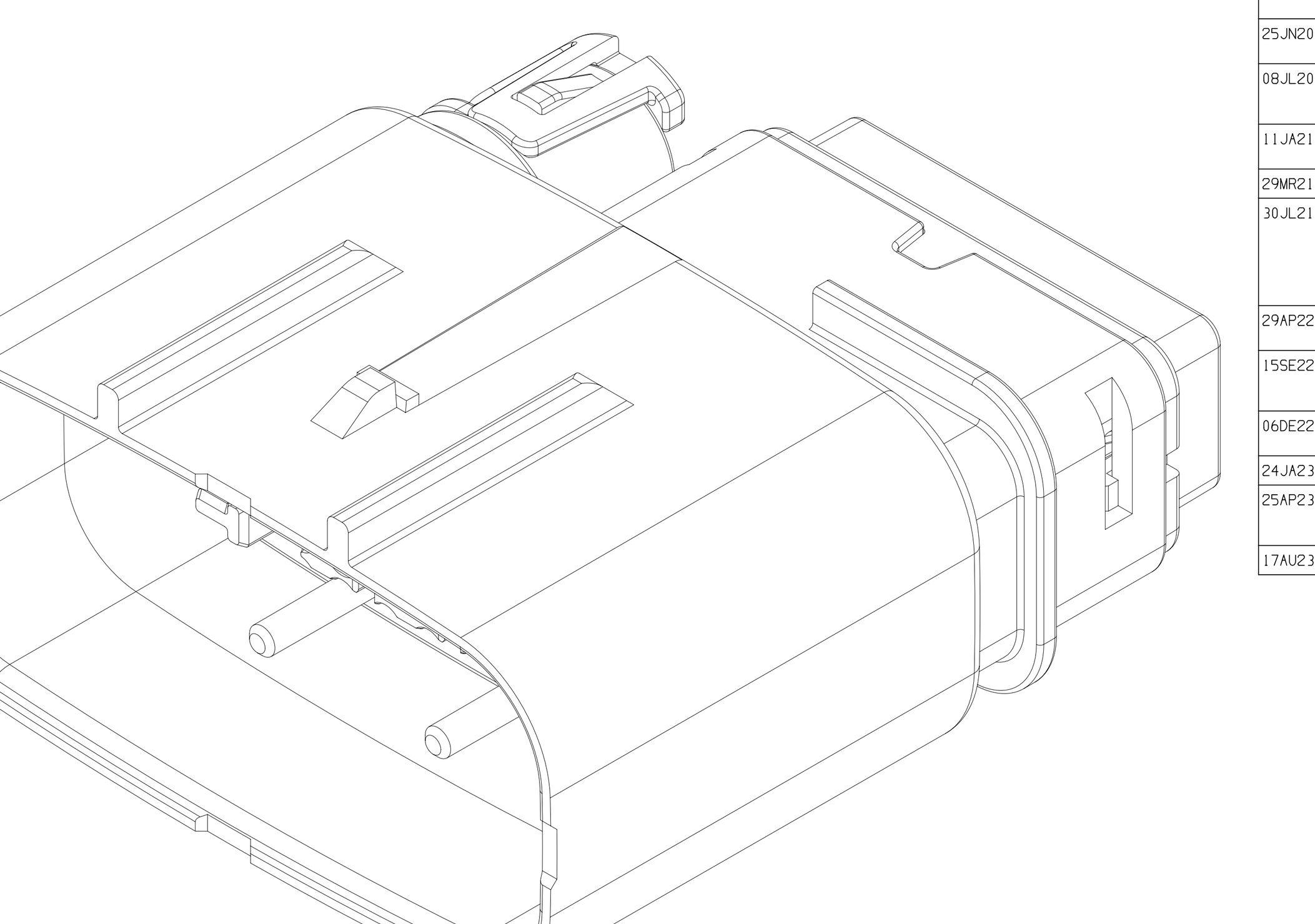

NOTES

1. UNLESS OTHERWISE SPECIFIED AND/OR INDICATED:

   DIMENSIONS ARE TO FACE OF VIEW SHOWN AND AUTOMATICALLY ROUNDED BY COMPUTER FOR INSPECTION (SEE MATH MODEL FOR PRECISE DIMENSIONS). FOR ALL OTHER DIMENSIONS NOT SHOWN BUT REQUIRED FOR TOOL BUILD, SEE MATH MODEL FOR PRECISE TOOL PATH DATA.

2. PART IS MANUFACTURED TO GEOMETRIC TOLERANCES. CENTERLINE DIMENSIONS ARE FOR REFERENCE ONLY.
3. THIS PRODUCT IS NOT CATEGORIZED AS AN APPEARANCE ITEM, MINOR IMPERFECTIONS INCLUDING, BUT NOT LIMITED TO, FLOW MARKS, COLOR BLEMISHES, GATE VESTIGE, AND SOFT FLASH THAT DO NOT AFFECT THE FIT, FORM, OR FUNCTION OF THE PART ARE PERMISSIBLE PER EANP_4-3_CS_01_EN.
4. FOR APPLICATION DATA SEE THE INDIVIDUAL APPLICATION DRAWINGS.
5. PART NUMBER 35641507(COAX STRAIN RELIEF) IS REQUIRED ON ALL ASSEMBLIES. PART IS TO BE INSTALLED AFTER COAX ASSEMBLY INSTALLATION.

A LINE DRAWN THROUGH A PART NUMBER INDICATES THAT PHYSICAL PARTS ARE NOT AVAILABLE FOR ORDERING.
PART NUMBERS THAT DO NOT HAVE A LINE PRESENT INDICATE THAT PHYSICAL PARTS ARE AVAILABLE FOR ORDERING.
CONTACT APTIV SALES TO ASSURE AVAILABILITY OF PARTS.

DWG TYPE: PART DRAWING
STYLE
VOLUME (CM³): SEE CHART
DISTR CODE: D

UNLESS OTHERWISE SPECIFIED
THIS DOCUMENT IS IN ACCORDANCE WITH ASME Y14.5-2009, SEE APTIV ENGINEERING DESIGN STANDARD 86 2017 FOR ISO 1101:2004 RECONCILIATION REQUIREMENTS.
ALL DIMENSIONS ARE IN MILLIMETERS
REFERENCE

(4) PROCESS SENSITIVE DIMENSION
DIMENSIONS ENCLOSED IN ( ) INDICATE REFERENCE DIMENSIONS AND NO TOLERANCE LIMITS ARE ESTABLISHED

DIMENSIONAL RANGE (MM)				CHART C
FROM / TO	>0 / 25	>25 / 60	>60 / 80	>80
TOLERANCE UNLESS OTHERWISE SPECIFIED	±0.3	±0.5	±0.6	±0.75%

ANGULAR TOLERANCE ±2°

THIRD ANGLE PROJECTION
DO NOT SCALE
USE MATH DATA
NX

•APTIV•
CONNECTION SYSTEMS
Chennai, India

COPYRIGHT 2019 APTIV. ALL RIGHTS RESERVED.
THIS DRAWING IS THE PROPERTY OF APTIV AND CONTAINS APTIV CONFIDENTIAL INFORMATION. THE REPRODUCTION, DISTRIBUTION AND UTILIZATION OF THIS DOCUMENT OR ITS RELATED CAD MATH DATA, AS WELL AS COMMUNICATION OF ANY CONTENT TO OTHERS, WITHOUT EXPRESS AUTHORIZATION, IS PROHIBITED.

		DATE
DR		
APVD1	ABHAYA KISHORE	24JN19
APVD2	S.SUBRAMANIAN	24JN19
APVD3	DALE J SMUNTY	24JN19
APVD4		
APVD5		

SUBSTANCES OF CONCERN AND RECYCLED CONT10949001 10949001
MATERIAL: SEE CHART
DRAWING NAME: TAXI ASM CONN 18 M COAX JACK OCS 1.5 SLD
DRAWING NUMBER: 35331372

SIZE	SCALE	FRAME NO	SHEET NO	STG	REV	N/P
A1x5	5:1	1 OF 2	1 OF 1	R	14	-

DRAWING NUMBER 35331372
SIZE A1x5 | SCALE | FRAME NO 2 OF 3 | SHEET NO | STG R | REV 14 | N/P -

DRAWING NUMBER 35331372
SIZE A1x5 | SCALE | FRAME NO 3 OF 3 | SHEET NO | STG R | REV 14 | N/P -