

SECTION A - A

TPA IN PRE LOCK POSITION

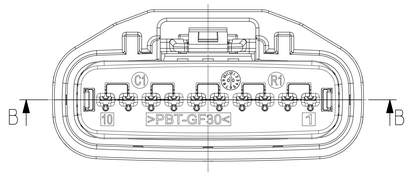

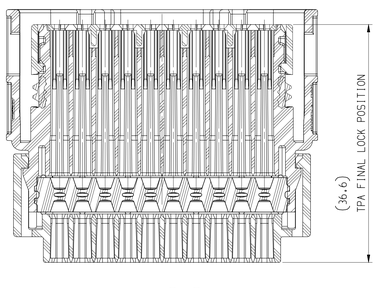

SECTION B - B

TPA IN FINAL LOCK POSITION

SYMBOL DEFINITION		
A DIMENSION WITHOUT AN INSPECTION REPORT SYMBOL (3) DOES NOT REQUIRE INSPECTION. IT MAY BE CONTROLLED ON THE INDIVIDUAL COMPONENT DRAWING.	TOTAL NO OF INSPECTIONS REQUIRED	3
	LAST NO. USED	3

MISSING SYMBOLS
NO MISSING SYMBOL NUMBER

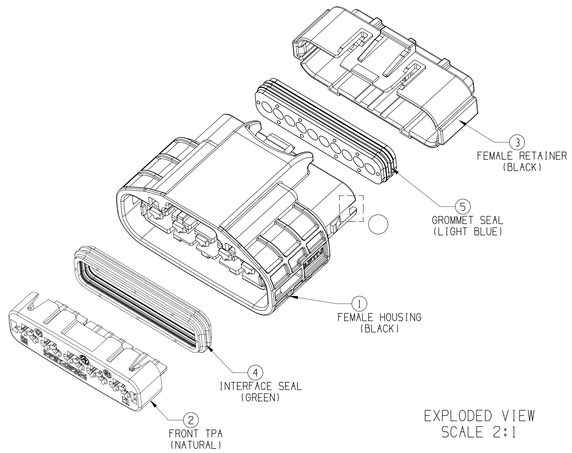

EXPLODED VIEW
SCALE 2:1

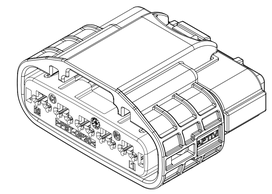

ISOMETRIC VIEW
SCALE 2:1

DWG STATUS DATE	STG	REV	N/P	CHG	ZONE	REVISION HISTORY	AUTH	DR	APVD1	APVD2
12MR18	R	01	-	-		INITIAL RELEASE	440023	KDJ	SJW	PJH
11MR19	R	02	-	-		SERIAL RELEASE	1B3001	KDH	-	SJW
12JN19	R	03	-	-	GB E9	IMPROVE LATCH DESIGN FOR CUS REQUEST CHANGE TOLERANCE W/ REGARD TO ASSEMBLY	193915	KDH	-	SJW
06SP19	R	04	-	-	K7 F4 F10	CHANGE HOUSING DESIGN FOR CUS REQUEST	194587	KDH	-	SJW

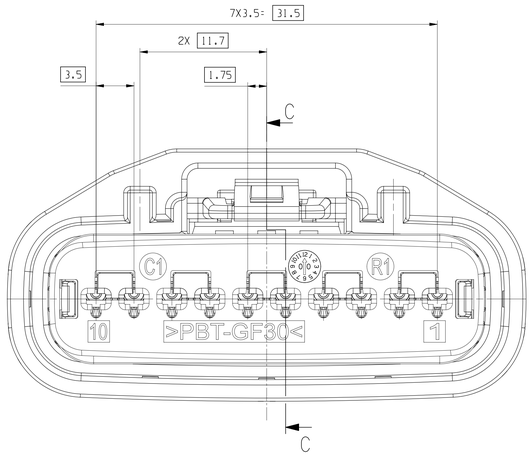

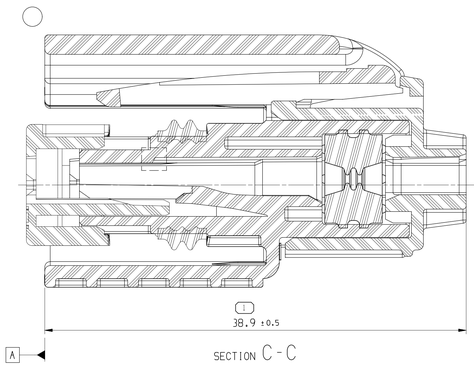

SECTION C - C

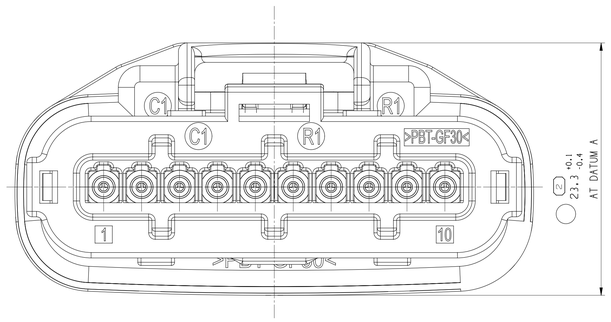

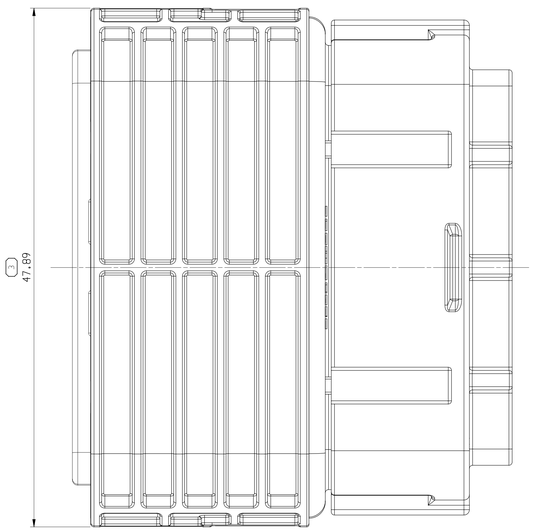

35190401	5	1	GROMMET SEAL	SILICONE RUBBER	LIGHT BLUE	35190410
	4	1	INTERFACE SEAL	SILICONE RUBBER	GREEN	35190408
	3	1	FEMALE RETAINER	PBT GF30	BLACK	35190406
	2	1	FEMALE TPA	PBT GF30	NATURAL(WHITE)	35190405
	1	1	FEMALE HOUSING	PBT GF30	BLACK	35190402
ASSEMBLY P/N	REP.	QTY.	DESCRIPTION	MATERIAL	COLOR	APTIV P/N

ASSOCIATED PARTS					
FEMALE TERMINALS		PART NUMBER		WIRE SIZE (mm²)	TYPE
Apex150	Sn PLATING	54002000	13624983	0.3 - 0.5	0.8 X 1.5
	Au PLATING	54002002	13725913		
	Sn PLATING	54001625	13613157	0.75 - 1.25	0.8 X 1.5
	Au PLATING	54001627	13779834		
CAVITY PLUG FOR Apex150		54241629	13613164	CAVITY PLUG	
DESCRIPTION		MVL PART NUMBER	APTIV PART NUMBER		

DIN ISO 2768	Tolerance Class Medium (m)						
Linear Dimensions except for broken edges	Permissible deviations for basic size range (mm)						
	0.5 *) up to 3	over 3 up to 6	over 6 up to 30	over 30 up to 120	over 120 up to 400	over 400 up to 1000	over 1000 up to 2000
	±0.1	±0.1	±0.2	±0.3	±0.5	±0.8	±1.2
Broken edges (radii, chamfers)	Permissible deviations for basic size range (mm)						
	0.5 *) up to 3		over 3 up to 6			over 6	
	±0.2		±0.5			±1	
	Permissible deviations for ranges of lengths, in mm, of the shorter side of the angle concerned						
Angular dimensions	up to 10	over 10 up to 50	over 50 up to 120		over 120 up to 400		over 400
	±1°	±0° 30'	±0° 20'		±0° 10'		±0° 5'
*) For nominal sizes below 0.5mm, the deviations shall be indicated adjacent to the relevant nominal size(s).							

NOTES:

1. MAXIMUM TEMPERATURE CLASS:
   CLASS I I I (125° C)
2. TEST METHOD PER:
   ES91500-00
3. ALLOWED WIRE SIZE RANGE:
   0.3mm² TO 1.25MM² (JASO WIRE)
4. CONNECTOR MAY BE USED WITH THE FOLLOWING TERMINALS:
   APTIV APEX150 WITH WIRE SIZES DEFINED IN NOTE 3:
5. ANNUAL QUALITY REQUIREMENTS:
   IT IS PERMISSIBLE TO PERFORM CONTINUOUS CONFORMANCE PER APTIV SPECIFICATION.
6. MATING MALE INTERFACE DRAWING NO.:35179818

A ——— LINE DRAWN THROUGH A PART NUMBER INDICATES THAT PHYSICAL PARTS ARE NOT AVAILABLE FOR ORDERING.

PART NUMBERS THAT DO NOT HAVE A LINE PRESENT INDICATE THAT PHYSICAL PARTS ARE AVAILABLE FOR ORDERING.

CONTACT APTIV SALES TO ASSURE AVAILABILITY OF PARTS.

DWG TYPE: PART DRAWING

STYLE

VOLUME (CM³) | DISTR CODE

UNLESS OTHERWISE SPECIFIED
THIS DOCUMENT IS IN ACCORDANCE WITH ASME Y14.5M-1994 AS AMENDED BY THE DM GLOBAL DIMENSIONING AND TOLERANCING ADDENDUM-2001. SEPARATE PATTERNS OF FEATURES MAY BE GAGED SEPARATELY REGARDLESS OF DATUM REFERENCES.

ALL DIMENSIONS ARE IN MILLIMETERS

REFERENCE

(3) PROCESS SENSITIVE DIMENSION

DIMENSIONS ENCLOSED IN ( ) INDICATE REFERENCE DIMENSIONS AND NO TOLERANCE LIMITS ARE ESTABLISHED

DIMENSIONAL RANGE (MM) FROM	> 0 TO 20	> 20 TO 30	> 30 TO 70	> 70 TO 100	> 100 TO 150	> 150 TO 200	> 200 TO 250	> 250 TO 300	> 300 TO 400
TOLERANCE UNLESS OTHERWISE SPECIFIED	±0.15	±0.2	±0.3	±0.4	±0.5	±0.6	±0.8	±1	±1.2
ANGULAR TOLERANCE ±2°									

THIRD ANGLE PROJECTION

DO NOT SCALE
USE MATH DATA

NX

•APTIV•
CONNECTION SYSTEMS
Namgung, Korea
COPYRIGHT APTIV. ALL RIGHTS RESERVED.
THIS DRAWING IS THE PROPERTY OF APTIV AND CONTAINS APTIV CONFIDENTIAL INFORMATION. THE REPRODUCTION, DISTRIBUTION AND UTILIZATION OF THIS DOCUMENT OR ITS RELATED CAD MATH DATA, AS WELL AS COMMUNICATION OF ANY CONTENT TO OTHERS, WITHOUT EXPRESS AUTHORIZATION, IS PROHIBITED.

		DATE
DR		
APVD1	KANG,DONG-JU	12MR18
APVD2	SEO,JU-WON	12MR18
APVD3	PARK,JOO-HYUN	12MR18
APVD4		
APVD5		

SUBSTANCES OF CONCERN AND RECYCLED CONTENT PER DELPHI 10949001

MATERIAL: SEE TABLE

DRAWING NAME: ASM CONN 10 F APEX 150 BLK SLD

DRAWING NUMBER: 35190401

SIZE	SCALE	FRAME NO	SHEET NO	STG	REV	N/P
A0	5:1	1 OF 1	1 OF 1	R	04	-