FEMALE CONNECTOR 8 WAY CODINGS

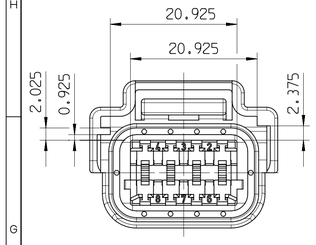

VIEW F

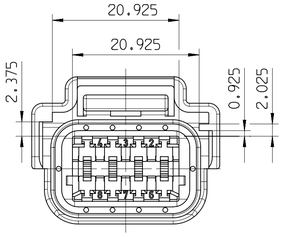

GREY	BLACK	COLOR
13800072	13800077	APTIV PART NUMBER
01	01	APTIV PART REVISION

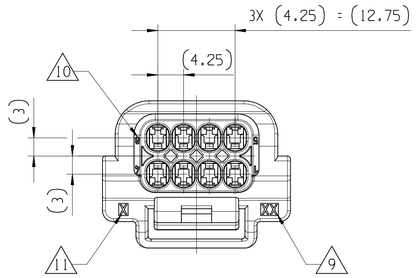

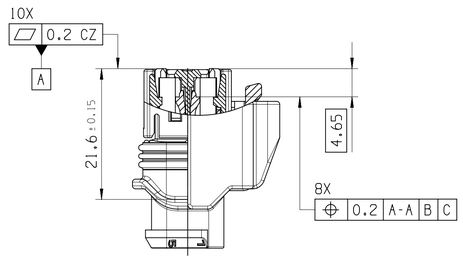

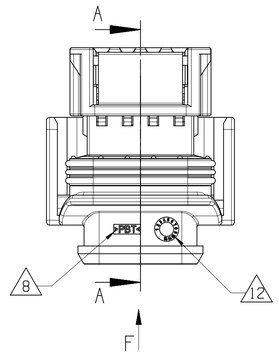

SECTION A-A

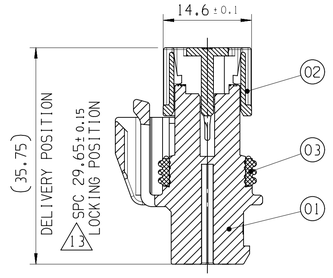

OVERALL DIMENSION FOR MOUNTABILITY

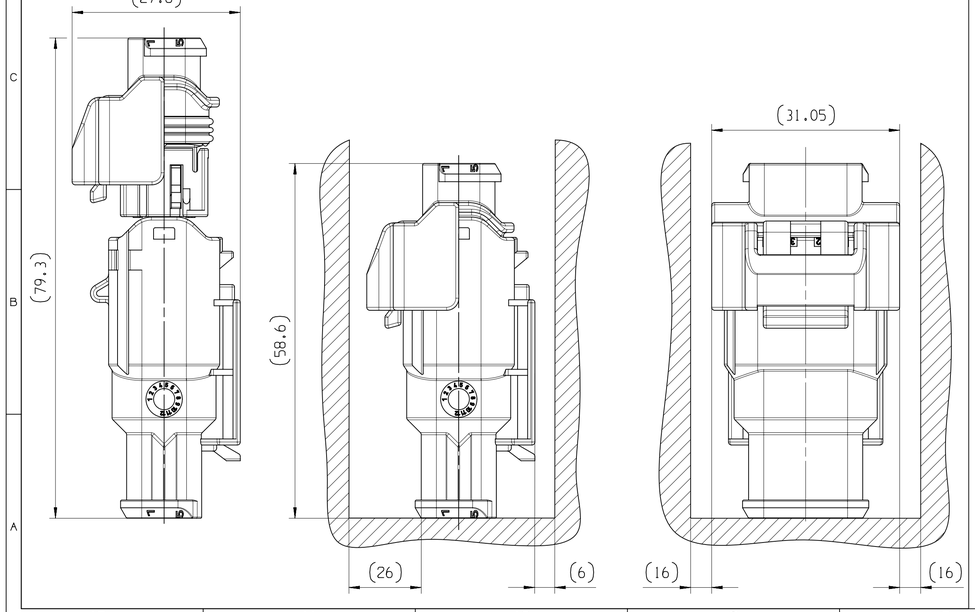

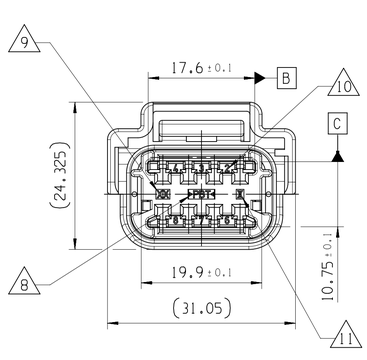

NOTE	SPECIFICATIONS
1	FEMALE CONNECTOR ACCORDING TO: -TEMPERATURE CLASS T3 -ENGINE VIBRATOR CLASS V2 -SEALING CLASS 2
2	USER'S MANUAL: 13800047-CUS76
3	FEMALE CONNECTOR AND CAVITY'S POSITION ACCORDING TO: 13800035-CUS02
4	WIRE DIAMETER 0.35-0.70mm² MINI: Ø 1.25 MAXI: Ø 2.1 1.35-2.0mm² MINI: Ø 2.1 MAXI: Ø 2.8
5	DELIVERY CONNECTOR WEIGHT : 8.54g
6	NO WAFER HINGE OR WAFER HINGE BROKEN ALLOWED
7	VISUAL DEFECTS ON NO FUNCTIONNAL AREAS ALLOWED
8	MATERIAL CODE
9	TOOL CAVITY NUMBER
10	PART CAVITY NUMBER
11	INDEX REPLACEMENT INSERT
12	DATE STAMP MONTH/YEAR
13	SPC: STATISTICAL PROCESS CONTROL

ASSOCIATED PARTS (FOR INFORMATION)

SECTION	SICMA 1.5 FEMALE TERMINAL APTIV P/N	INSULATION DIAMETER OF WIRE
0.35 - 0.70 mm²	13761154	1.25-2.1
1.35 - 2.0 mm²	13761648	2.1-2.8
TITLE		ASSOCIATED DOCUMENTS
CABLE SEAL Ø 1.25-1.9		10736278
CABLE SEAL Ø 1.75-3.0		10736279

FEMALE CONNECTOR 8 WAY	POS.	DESCRIPTION	APTIV PART NUMBER	MATERIAL	COLOR
	03	CONNECTOR SEAL	13800056	SILICONE	BLUE
	02	PLR	13800060	PBT	YELLOW
	01	FEMALE HOUSING	13800066	PBT	GREY
			13800049	PBT	BLACK

A ⁄ LINE DRAWN THROUGH A PART NUMBER INDICATES THAT PHYSICAL PARTS ARE NOT AVAILABLE FOR ORDERING.

PART NUMBERS THAT DO NOT HAVE A LINE PRESENT INDICATE THAT PHYSICAL PARTS ARE AVAILABLE FOR ORDERING.

CONTACT APTIV SALES TO ASSURE AVAILABILITY OF PARTS.



SHARP CORNER TOLERANCE

DIM TO CHECK	DIMENSIONAL RANGE (MM)								CHART E1	
( ) DIM FOR HELP	FROM TO	>0 20	>20 30	>30 70	>70 100	>100 150	>150 200	>200 250	>250 300	>300 400
THEORETIC DIM	TOLERANCE UNLESS OTHERWISE SPECIFIED	±0.15	±0.2	±0.3	±0.4	±0.5	±0.6	±0.8	±1	±1.2
	ANGULAR TOLERANCE ±2°									

REVISION HISTORY

DWG STATUS DATE	STG	REV	N/P	CHG	ZONE	REVISION HISTORY	AUTH	DR	APVD 1	APVD 2
070C20	R	01				INITIAL RELEASE		P.BAL	M.SKR	M.SKR

3D VIEW

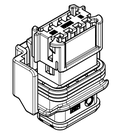

SCALE 1:1

DWG TYP: PART DRAWING

WEIGHT (GR): SEE NOTE

VOLUME (CM³): ---

ROUTING

DISTR CODE: D

UNLESS OTHERWISE SPECIFIED

GENERAL TOLERANCES ACCORDING TO:

SEE CHART

GD&T ACCORDING TO:

ISO 1101

REFERENCE

FIRST ANGLE PROJECTION

DO NOT SCALE

USE MATH DATA

CAD NX

•APTIV•

CONNECTION SYSTEMS

Chennai, India

COPYRIGHT 2020 APTIV. ALL RIGHTS RESERVED.

THIS DRAWING IS THE PROPERTY OF APTIV AND CONTAINS APTIV CONFIDENTIAL INFORMATION. THE REPRODUCTION, DISTRIBUTION AND UTILIZATION OF THIS DOCUMENT OR ITS RELATED CAD MATH DATA, AS WELL AS COMMUNICATION OF ANY CONTENT TO OTHERS, WITHOUT EXPRESS AUTHORIZATION, IS PROHIBITED.

		DATE
DR	P.BALAJI	070C20
APVD1	M.SIKORA	070C20
APVD2	M.SIKORA	070C20
APVD3		
APVD4		
APVD5		

SUBSTANCES OF CONCERN AND RECYCLED CONTENT PER APTIV 10949001

MATERIAL: SEE TABLE

DRAWING NAME: FEMALE CONNECTOR 8 WAY SEALED SICMA 3 1.5

DRAWING NUMBER: 13800047

SIZE	SCALE	FRAME NO	SHEET NO	STG	REV	N/P
A1	2:1	1 OF 1	1 OF 1	R	01	

User: K250TM
Dwg: 13800047-CUS02-S01/01 Date: 15-Oct-20 Time: 19:26:42
K250TM,10152020,15:56:1,75pass.cus