POSITION	1								2		3
NAME	HOUSING STRAP MOUNT								SECONDARY LOCK		SL SEAL
MATERIAL	PBT GF30 FR17				PBT GF30				PBT GF30 FR17	PBT GF30	LSR 50 SHORE
COLOR:	BLACK	GRAY	GREEN	BLUE	BLACK	GRAY	GREEN	BLUE	ORANGE	YELLOW	REDDISH-BROWN
PART-NO.:	33249101	33249102	33249107	33249108	33344604	33344607	33344622	33344624	33249026	33344606	33248990

ASSEMBLY-NO.:	PART-REV	CODING	MATERIAL/WEIGHT	-											
33254098	01	CODE A	ALL PARTS VO / 12.7	-	1	---	---	---	---	---	---	---	1	---	1
33254088	01	CODE B		-	---	1	---	---	---	---	---	---	1	---	1
33254085	01	CODE C		-	---	---	1	---	---	---	---	---	1	---	1
33254084	01	CODE D		-	---	---	---	1	---	---	---	---	1	---	1
~~33344861~~	01	CODE A	ALL PARTS NVO / 12.3	-	---	---	---	---	1	---	---	---	---	1	1
~~33344862~~ ①	01	CODE B		-	---	---	---	---	---	1	---	---	---	1	1
~~33344863~~	01	CODE C		-	---	---	---	---	---	---	1	---	---	1	1
~~33344864~~	01	CODE D		-	---	---	---	---	---	---	---	1	---	1	1

DWG STATUS DATE	STG	REV	N/P	CHG	ZONE	REVISION HISTORY	AUTH	DR	APVD 1	APVD 2
250C18	R	01				INITIAL RELEASE		K.FAR	P.NAJ	M.GRU
29MR19	R	01	AA		B7 A7	REFERENCE HELLERMANN TYTON DWG-NO. ADDED CLIP REFERENCE CHANGED		K.FAR	M.GRU	K.PIT
270C20	R	01	AB		B7 G10 C7 C7 A7 B7	PROTECTION CAP APTIV DWG-NO.: 35426243 WAS 35274873 PART AVAILABILITY FOR PART NUMBERS 33344861, 33344862, 33344863, 33344864 UPDATED ASSEMBLY INSTRUCTION NO. 35269104-CUS71 WAS 35269105-CUS71 ASSEMBLY INSTRUCTION NO. 35269104-CUS72 WAS 35269105-CUS72 NOTES UPDATED HT DWG-NO: 18-0195-001-CSG WAS 17-0195-001-CSG		P.NAJ	M.GRU	

STRAP MOUNTING

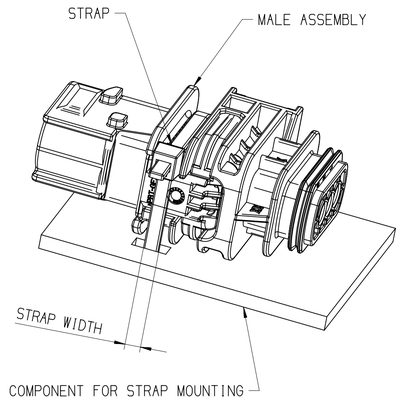

REMARK:
- MAX STRAP WIDTH 4.8MM

COMPONENT FOR STRAP MOUNTING

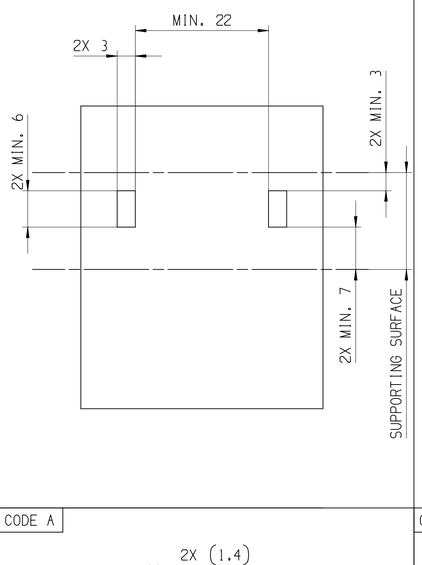

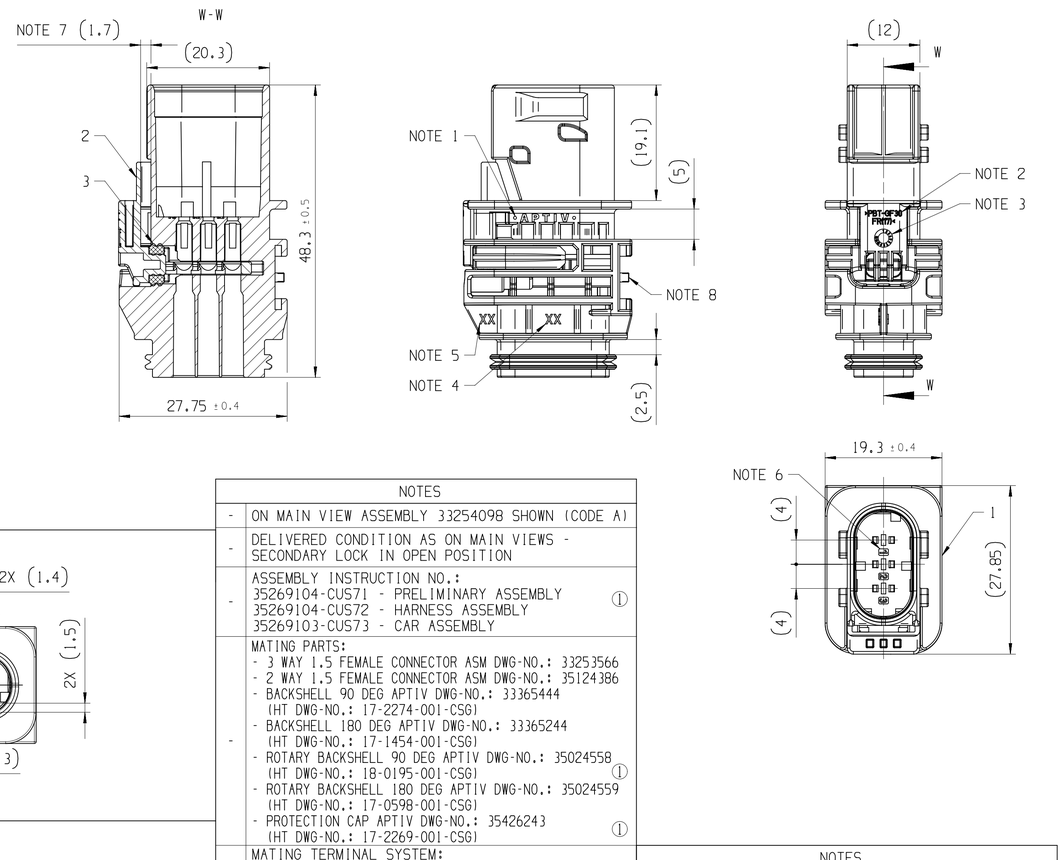

CODE A

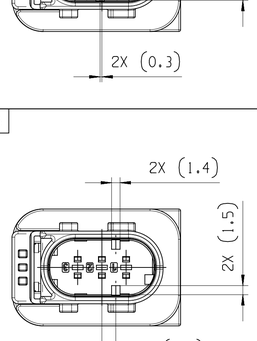

CODE C

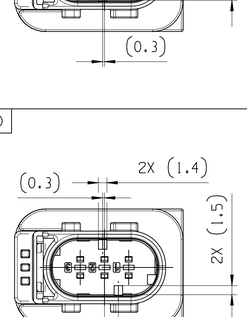

CODE B

CODE D

NOTES	
-	ON MAIN VIEW ASSEMBLY 33254098 SHOWN (CODE A)
-	DELIVERED CONDITION AS ON MAIN VIEWS - SECONDARY LOCK IN OPEN POSITION
-	ASSEMBLY INSTRUCTION NO.: 35269104-CUS71 - PRELIMINARY ASSEMBLY 35269104-CUS72 - HARNESS ASSEMBLY 35269103-CUS73 - CAR ASSEMBLY ①
-	MATING PARTS: - 3 WAY 1.5 FEMALE CONNECTOR ASM DWG-NO.: 33253566 - 2 WAY 1.5 FEMALE CONNECTOR ASM DWG-NO.: 35124386 - BACKSHELL 90 DEG APTIV DWG-NO.: 33365444 (HT DWG-NO.: 17-2274-001-CSG) - BACKSHELL 180 DEG APTIV DWG-NO.: 33365244 (HT DWG-NO.: 17-1454-001-CSG) - ROTARY BACKSHELL 90 DEG APTIV DWG-NO.: 35024558 (HT DWG-NO.: 18-0195-001-CSG) ① - ROTARY BACKSHELL 180 DEG APTIV DWG-NO.: 35024559 (HT DWG-NO.: 17-0598-001-CSG) - PROTECTION CAP APTIV DWG-NO.: 35426243 (HT DWG-NO.: 17-2269-001-CSG) ①
-	MATING TERMINAL SYSTEM: - 1.5 TERMINAL DWG-NO.: 15396739 MAX WIRE CROSS SECTION: 1.0MM² RECOMMENDATION FOR 1.5 TERMINAL WITH WIRE CROSS SECTION 1.5MM² - USE COMBINATION: TE TERMINAL: TAB 1.6, DWG NO.: 1703278-5 ① SEAL: 2112323-1 MAX INSULATION CRIMP DIMENSIONS: HEIGHT: 3.40; WIDTH: 3.40
1	APTIV LOGO
2	MATERIAL NAME ACCORDING TO VDA 260
3	DATE INSERT
4	TOOL CAVITY NUMBER
5	INDEX REPLACEMENT INSERT

NOTES	
6	PART CAVITY NUMBER
7	MOVING DISTANCE OF SECONDARY LOCK
8	INTERFACE FOR CLIP MOUNTING HT CLIP NUMBER: YCCSFT6.5PT0.8-2.5; FT6LG.M.St.Aufn.II ①

A — LINE DRAWN THROUGH A PART NUMBER INDICATES THAT PHYSICAL PARTS ARE NOT AVAILABLE FOR ORDERING.

PART NUMBERS THAT DO NOT HAVE A LINE PRESENT INDICATE THAT PHYSICAL PARTS ARE AVAILABLE FOR ORDERING.

CONTACT APTIV SALES TO ASSURE AVAILABILITY OF PARTS.

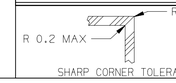

SHARP CORNER TOLERANCE

DIM TO CHECK / ( ) DIM FOR HELP / THEORETIC DIM	DIMENSIONAL RANGE (MM)								
	FROM	> 0	> 20	> 30	> 70	>100	>150	>200	>250	>300
	TO	20	30	70	100	150	200	250	300	400
	TOLERANCE UNLESS OTHERWISE SPECIFIED									
		±0.15	±0.2	±0.3	±0.4	±0.5	±0.6	±0.8	±1	±1.2
	ANGULAR TOLERANCE ±2°									

CHART E1

SCALE: 1:1

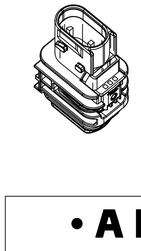

DWG TYP: PART DRAWING
WEIGHT (GR): SEE CHART
VOLUME (CM³): ---
ROUTING
DISTR CODE: D

UNLESS OTHERWISE SPECIFIED

GENERAL TOLERANCES ACCORDING TO: SEE CHART

GD&T ACCORDING TO: ISO 1101

REFERENCE

FIRST ANGLE PROJECTION

DO NOT SCALE
USE MATH DATA

CAD NX

•APTIV•

CONNECTION SYSTEMS
KRAKOW, POLAND

COPYRIGHT 2018 APTIV. ALL RIGHTS RESERVED.

THIS DRAWING IS THE PROPERTY OF APTIV AND CONTAINS APTIV CONFIDENTIAL INFORMATION. THE REPRODUCTION, DISTRIBUTION AND UTILIZATION OF THIS DOCUMENT OR ITS RELATED CAD MATH DATA, AS WELL AS COMMUNICATION OF ANY CONTENT TO OTHERS, WITHOUT EXPRESS AUTHORIZATION, IS PROHIBITED.

TEN RYSUNEK JEST WŁASNOŚCIĄ APTIV I ZAWIERA POUFNE INFORMACJE. POWIELANIE, ROZPOWSZECHNIANIE I WYKORZYSTYWANIE TEGO DOKUMENTU LUB ZWIĄZANYCH Z NIM DANYCH CAD, JAK RÓWNIEŻ PRZEKAZYWANIE INNYM JAKIEJKOLWIEK ICH ZAWARTOŚCI, BEZ NADANIA WYRAŹNYCH UPRAWNIEŃ, JEST ZABRONIONE

		DATE
DR	K.FARON	240C18
APVD1	P.NAJDUCH	250C18
APVD2	M.GRUDZEWSKI	260C18
APVD3		
APVD4		
APVD5		

SUBSTANCES OF CONCERN AND RECYCLED CONTENT PER APTIV 10949001
SUBSTANCJE NIEBEZPIECZNE I POWTORNIE PRZETWORZONE OKREŚLA APTIV 10949001

MATERIAL: SEE CHART

DRAWING NAME: 3 WAY 1.5 CTCS STRAP MOUNT MALE ASSEMBLY

DRAWING NUMBER: 33254069

SIZE	SCALE	FRAME NO	SHEET NO	STG	REV	N/P
A1	2:1	1 OF 1	1 OF 1	R	01	AB

CONTROLLED DOCUMENTS ARE ONLY AVAILABLE ON THE SERVER

User: szcgwx
Name: 33254069-CUS01-S01.01AB Date: 02-lis-20 Time: 16:37:25
Scgwx;1100220;16:36;60;pcs;nor