

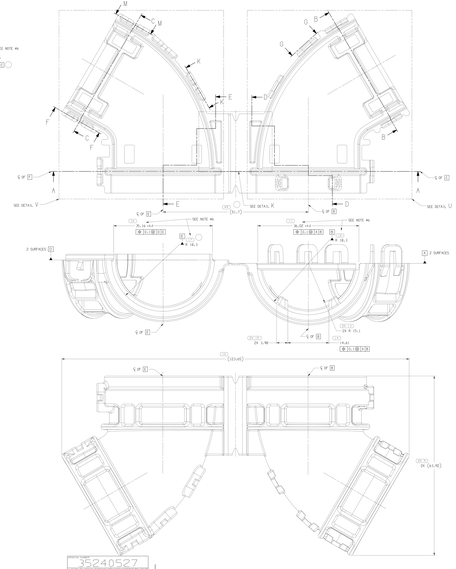

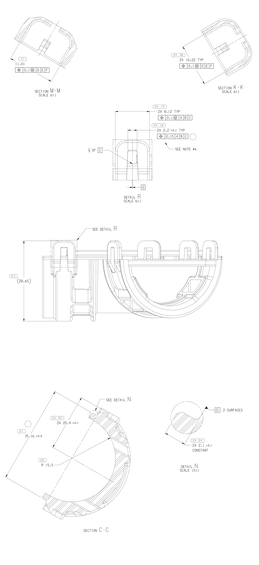

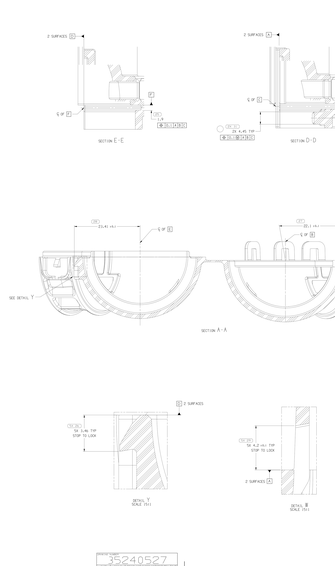

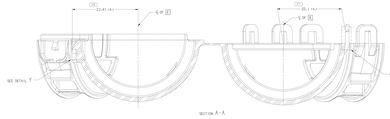



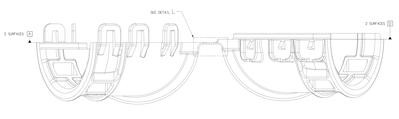

SYMBOL DEFINITION		
A, D DENOTES REFERENCE ANA INSPECTION REPORT SYMBOL.	TOTAL NO. OF DIMENSIONS REQUIRED	23
ALL DIMENSIONS MARKED WITH A DIAMOND SYMBOL ARE TRUE POSITIONS CALCULATED ON THE TRUE/FINAL COMPUTER DATA FILE.	NOTES TO BE VERIFIED ON INSPECTION REPORT	0
	LAST NO. ORD	49

| ZONE | REVISION HISTORY | | |