SYMBOL DEFINITION		
A DIMENSION WITHOUT AN INSPECTION REPORT SYMBOL (◯) DOES NOT REQUIRE INSPECTION. IT MAY BE CONTROLLED ON THE INDIVIDUAL COMPONENT DRAWING.	TOTAL NO OF INSPECTIONS REQUIRED	16
	LAST NO. USED	11

MISSING SYMBOLS

NO MISSING SYMBOL NUMBER

DWG STATUS DATE	STG	REV	N/P	CHG	ZONE	REVISION HISTORY	AUTH	DR	APVD1	APVD2
06OC21	R	01	-	-		35559850 WAS PE469282; 35559851 WAS PE490302; ALL PARTS - RELEASED PART DRAWING	555552	CGD	CGD	EDA
06JN22	R	02	-	-		ALL PARTS - DIM #6 WAS 2X 32.54 TYP, DIM 2 WAS 2X 3.25 TYP ⌖ 0.1 A B C, DIM 3 WAS 2X 8.25 TYP ⌖ 0.1 A B C, DIM 7 WAS 8.25 ±0.1 ⌖ 0.1Ⓜ A B C, ADDED GAGE NOTE AND UPDATED PART AVAILABILITY	557716	DCH	DCH	EDA
14JL23	R	03	-	-		ALL PARTS - 29.49 MIN. WAS 29.62 MIN. ON DUE TO BOW NOTE	561149	MLR	JGO	EDA

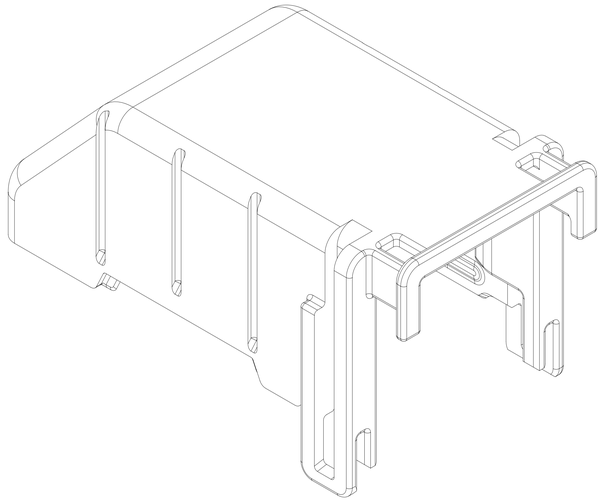

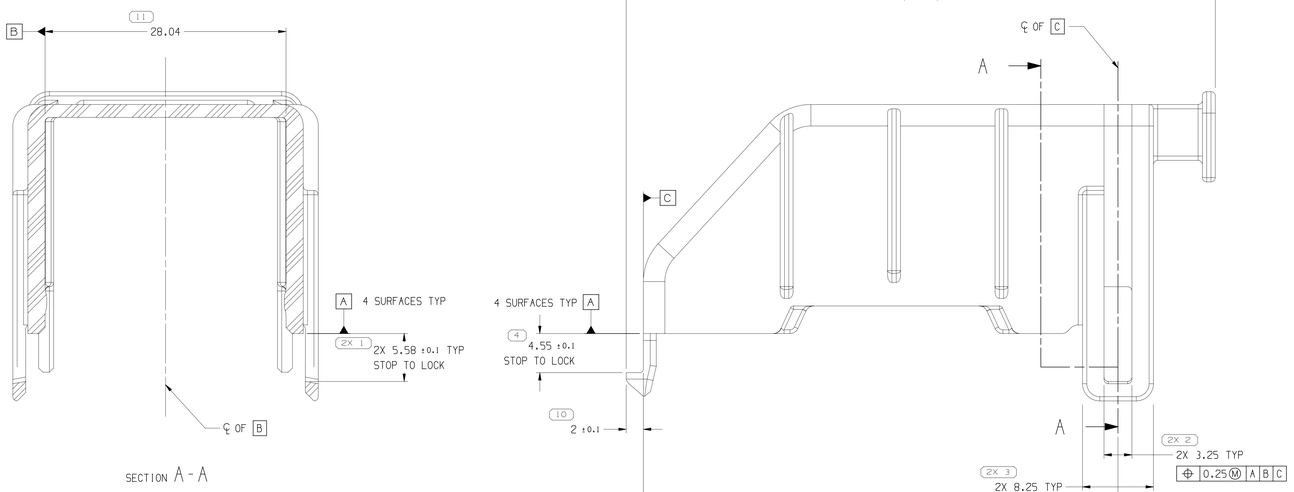

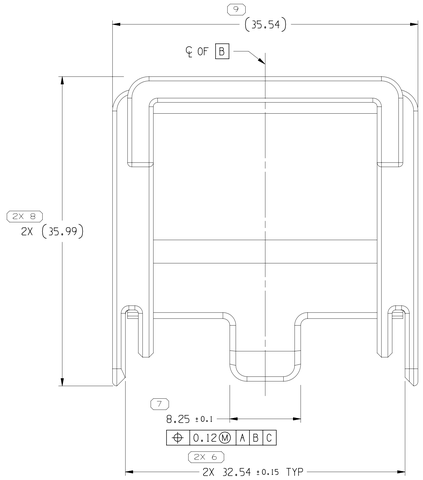

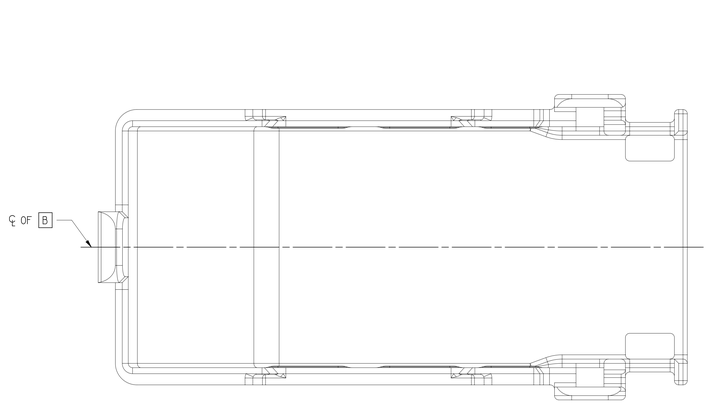

NOTES

1. UNLESS OTHERWISE SPECIFIED AND/OR INDICATED:

   DIMENSIONS ARE TO FACE OF VIEW SHOWN AND AUTOMATICALLY ROUNDED BY COMPUTER FOR INSPECTION (SEE MATH MODEL FOR PRECISE DIMENSIONS). FOR ALL OTHER DIMENSIONS NOT SHOWN BUT REQUIRED FOR TOOL BUILD, SEE MATH MODEL FOR PRECISE TOOL PATH DATA.

2. THIS PRODUCT IS NOT CATEGORIZED AS AN APPEARANCE ITEM, MINOR IMPERFECTIONS INCLUDING, BUT NOT LIMITED TO, FLOW MARKS, COLOR BLEMISHES, GATE VESTIGE, AND SOFT FLASH THAT DO NOT AFFECT THE FIT, FORM, OR FUNCTION OF THE PART ARE PERMISSIBLE PER EANP_4-3_CS_01_EN.

3. REFERENCE MATING COMPONENTS OR EQUIVALENT:

   TAXI CONN TBT
   INNER CONNECTOR 35559841

4. CORPORATE BRAND TO BE APPLIED TO PRODUCT DESIGN PER THE LATEST REVISION OF ESD S1085201.

5. DENOTES GAGE REQUIREMENTS FOR USER AND MANUFACTURER REQUIRED. SEE PROCESS CONTROL PLAN FOR GAGE REQUIREMENTS. FOR INSPECTION USE GAGE G-J967.

PART NO	REV	N/P	TYPE	MAT'L SPEC	VOLUME (CM³)
35559851	01	AB	102	PLASTIC POLYESTER COMPOUND YELLOW	9.293
35559850	01	AB	101	PLASTIC POLYESTER COMPOUND BLACK	9.293

A ——— LINE DRAWN THROUGH A PART NUMBER INDICATES THAT PHYSICAL PARTS ARE NOT AVAILABLE FOR ORDERING.

PART NUMBERS THAT DO NOT HAVE A LINE PRESENT INDICATE THAT PHYSICAL PARTS ARE AVAILABLE FOR ORDERING.

CONTACT APTIV SALES TO ASSURE AVAILABILITY OF PARTS.

DWG TYPE: PART DRAWING

STYLE

VOLUME (CM³) | DISTR CODE

UNLESS OTHERWISE SPECIFIED

THIS DOCUMENT IS IN ACCORDANCE WITH ASME Y14.5-2009, SEE APTIV ENGINEERING DESIGN STANDARD B6 2017 FOR ISO 1101:2004 RECONCILIATION REQUIREMENTS.

ALL DIMENSIONS ARE IN MILLIMETERS

REFERENCE

(10) PROCESS SENSITIVE DIMENSION

DIMENSIONS ENCLOSED IN ( ) INDICATE REFERENCE DIMENSIONS AND NO TOLERANCE LIMITS ARE ESTABLISHED

DIMENSIONAL RANGE (MM) FROM TO	>0 20	>20 30	>30 70	>70 100	>100 150	>150 200	>200 250	>250 300	>300 400	CHART EI
TOLERANCE UNLESS OTHERWISE SPECIFIED	±0.15	±0.2	±0.3	±0.4	±0.5	±0.6	±0.8	±	±1.2	
ANGULAR TOLERANCE ±2°										

THIRD ANGLE PROJECTION

DO NOT SCALE
USE MATH DATA

NX

•APTIV•

CONNECTION SYSTEMS
WARREN, OH

COPYRIGHT 2021 APTIV, ALL RIGHTS RESERVED.

THIS DRAWING IS THE PROPERTY OF APTIV AND CONTAINS APTIV CONFIDENTIAL INFORMATION. THE REPRODUCTION, DISTRIBUTION AND UTILIZATION OF THIS DOCUMENT OR ITS RELATED CAD MATH DATA, AS WELL AS COMMUNICATION OF ANY CONTENT TO OTHERS, WITHOUT EXPRESS AUTHORIZATION, IS PROHIBITED.

	DATE
DR	
APVD1 CARLOS DELGADILLO	06OC21
APVD2 CARLOS DELGADILLO	06OC21
APVD3 EDUARDO DIAZ A.	06OC21
APVD4	
APVD5	

SUBSTANCES OF CONCERN AND RECYCLED CONTI 0949001 | 0949001

MATERIAL: SEE CHART

DRAWING NAME: TAXI COV CONN

DRAWING NUMBER: 35559852

SIZE	SCALE	FRAME NO	SHEET NO	STG	REV	N/P
A0	4:1	1 OF 1	1 OF 1	R	03	-

User: SAE
Plot: 14-Jul-23 Time: 10:36:48